# ELSTON

## Gopher Getters

## Parts List for GA-400 and GA-500

Another Quality Product of:

**ELSTON MANUFACTURING INC.**
706 N Weber
Sioux Falls, SD 57103
www.elstonmfg.com
1-800-845-1385

Please Contact Us for Parts and Service:

Form G-312-D
Updated 2009

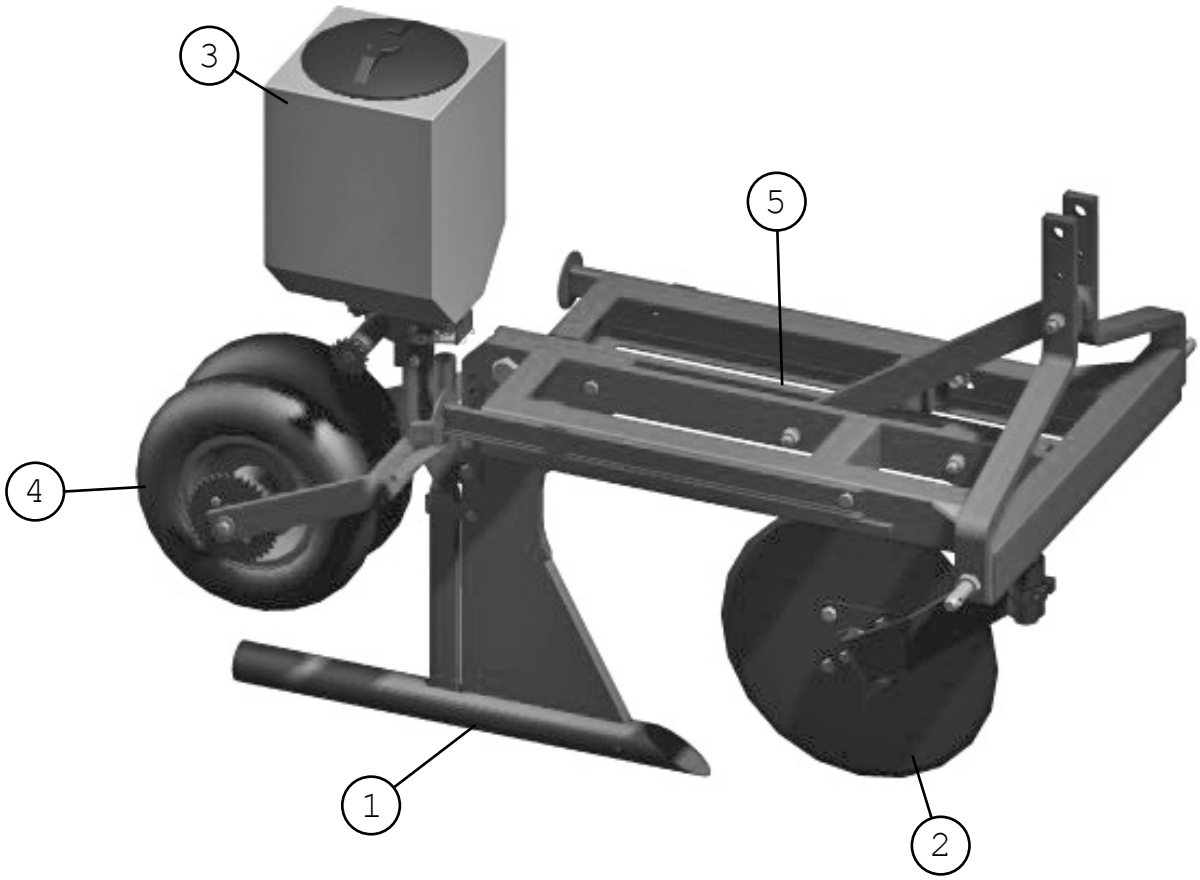


**Assemblies**

| Ref # | Name | Page # |
|---|---|---|
| 1 | Knife Assembly | 1-2 |
| 2 | Coulter Assembly | 1-3 |
| 3 | Seeder Assembly | 1-4 |
| 4 | Packer Wheel Assembly | 1-5 |
| 5 | Frame Assembly | 1-6 |

**Common Parts**

| Name | Part # | Page # |
|---|---|---|
| Torpedo Point | G1-105 | 1-2 |
| Coulter Blade - 18" | G2-370 | 1-3 |
| Tire | G3-125 | 1-5 |
| Tripper | G4-269 | 1-4 |
| Knife Assembly (Complete) | G1-100 | 1-2 |

**Parts List for GA-500 begins on Page 2-1**
**Please Call Elston Manufacturing for information on purchasing gopher bait (poison).**

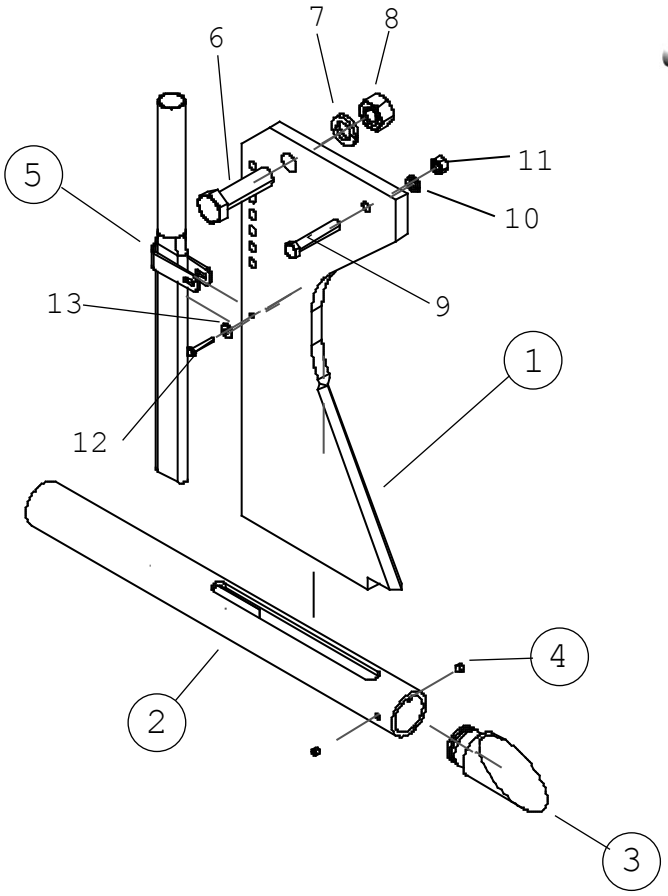


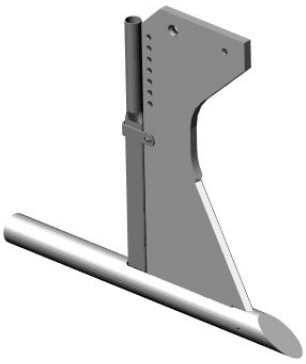

| Ref # | Name | Part # |
|---|---|---|
| 1 | Knife | G1-103 |
| 2 | Torpedo Tube | G1-104 |
| 3 | Torpedo Point | G1-105 |
| 4 | 3/8" x 3/8” Set Screw | G1-143 |
| 5 | Seeder Tube | G1-193 |
| 1-5, 12-15 | Knife Assembly (complete) | G1-100 |

| Ref # | Description |
|---|---|
| 6 | 1" x 3 1/2" Hex Head Bolt |
| 7 | 1" Lock Washer |
| 8 | 1" Hex Nut |
| 9 | 1/2" x 3" Hex Head Bolt (Grade 2)* |
| 10 | 1/2" Lock Washer |
| 11 | 1/2" Hex Nut |
| 12 | 1/4" x 1 1/2" Hex Head Bolt |
| 13 | 1/4" Flat Washer (One Not Shown) |
| 14 | 1/4" Lock Washer (Not Shown) |
| 15 | 1/4" Hex Nut (Not Shown) |

* This bolt must be grade 2 (or softer). It is designed as a shear bolt to prevent damage when hitting underground obstructions. Using a harder bolt could result in expensive repairs.

All hardware listed is coarse thread (UNC) and Grade 5 or better unless otherwise noted.

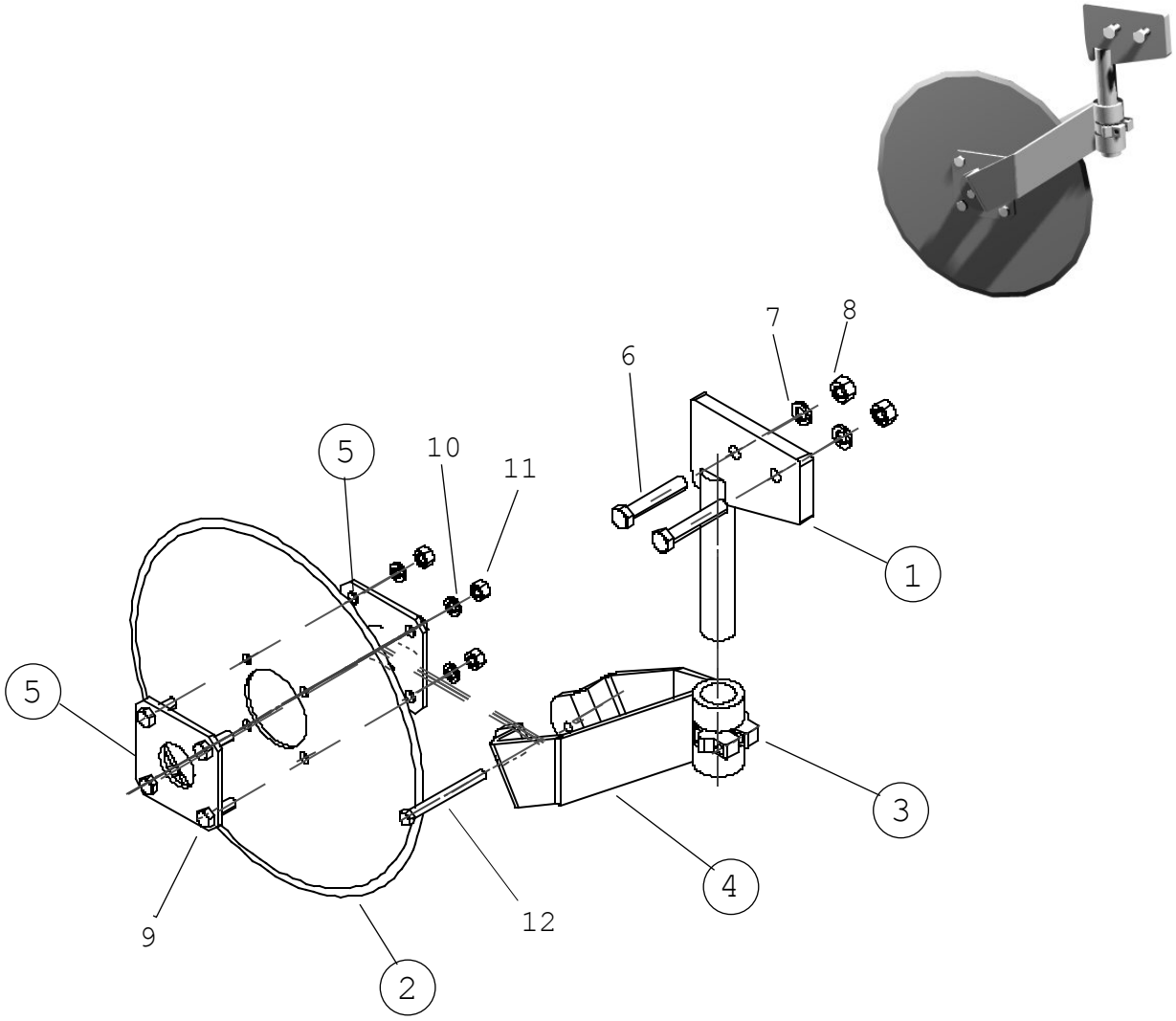


| Ref # | Name | | Part # |
|---|---|---|---|
| 1 | Coulter Shank | | G2-326 |
| 2 | Coulter Blade - 18"<br>Coulter Blade - 22" | | G2-370-18<br>G2-370-22 |
| 3 | Coulter Clamp | | G2-375 |
| 4 | Coulter Side - 18"<br>Coulter Side - 22" | | G2-380-18<br>G2-380-22 |
| 5 | Blade Hub | | see p. 3-1 |
| 5,9-11 | Blade Hub Assembly | | G2-379 |
| 2,5,<br>9-14 | Coulter Blade and<br>Hub Assembly | 18”<br>22" | G2-390-18<br>G2-390-22 |
| 2-5,<br>9-14 | Coulter Assembly | 18"<br>22" | G2-100-18<br>G2-100-22 |

| Ref # | Description |
|---|---|
| 6 | 5/8" x 3 1/2" Hex Head Bolt |
| 7 | 5/8" Lock Washer |
| 8 | 5/8" Hex Nut |
| 9 | 1/2" x 1 1/2" Hex Head Bolt |
| 10 | 1/2" Lock Washer |
| 11 | 1/2" Hex Nut |
| 12 | 7/16"-20 4 1/2" Hex Head Bolt |
| 13 | 7/16" Lock Washer (Not Shown) |
| 14 | 7/16" Hex Nut (Not Shown) |

All hardware listed is coarse thread (UNC) and Grade 5 or better unless otherwise noted.

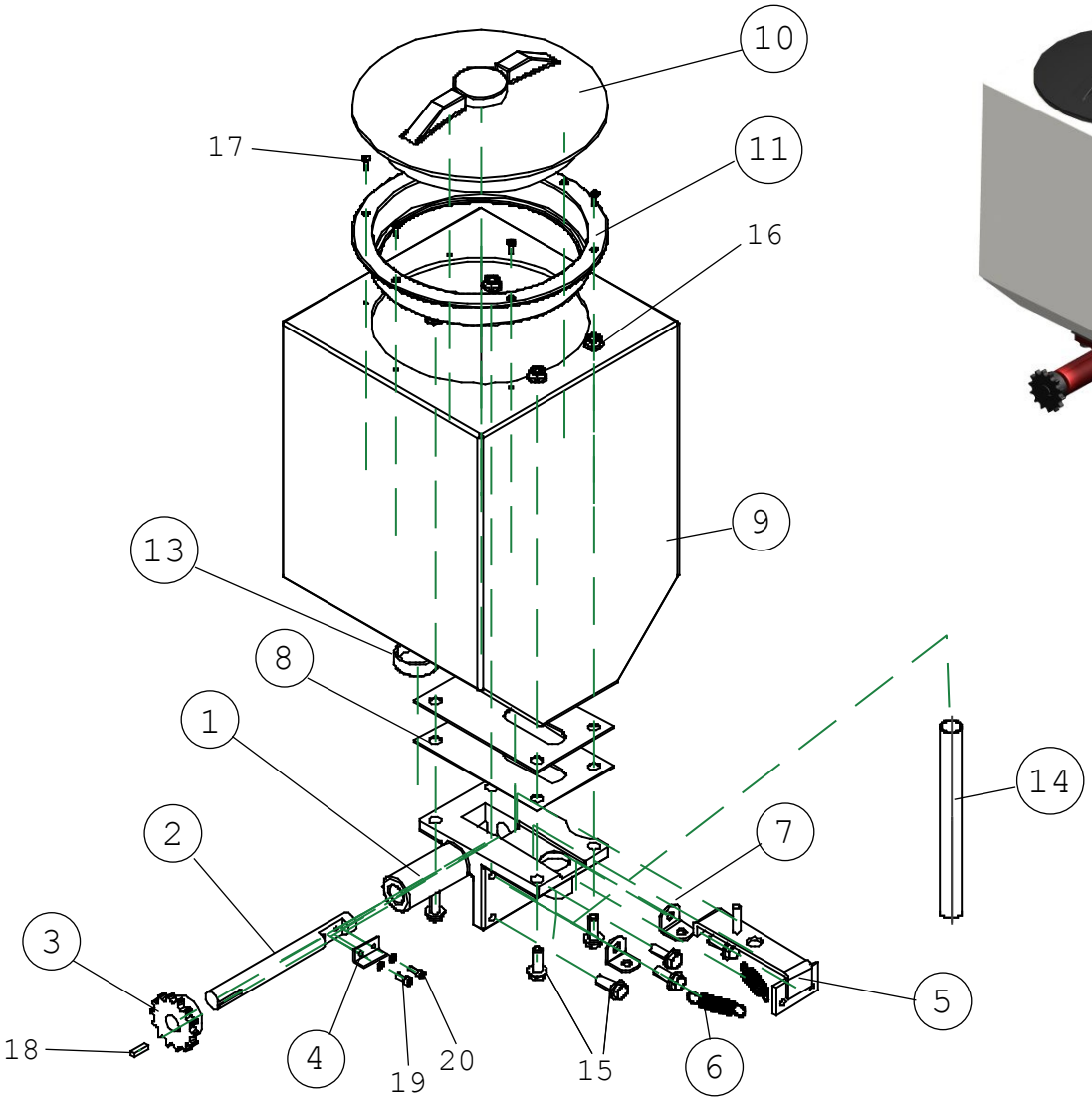


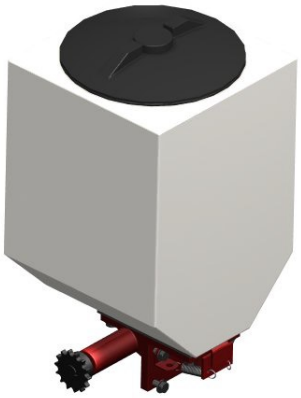

| Ref # | Name | Part # |
|---|---|---|
| 1 | Seeder Casting | G4-200 |
| 2 | Seeder Axle | G4-201 |
| 3 | Drive Gear | G4-203 |
| 4 | Tripper | G4-269 |
| 5 | Seeder Slide - 5/8” Hole<br>for 7/8” Hole use G4-208A | G4-208 |
| 6 | Seeder Slide Spring | G4-215 |
| 7 | Spring Holder Clip | G4-278 |
| 8 | Poison Guide Plate | G4-286 |
| 9 | Seeder Box | G4-230P |
| 10 | Seeder Box Lid | G4-234P |
| 12 | Lid Retaining Strap<br>(Not Shown) | G4-233P |
| 10-12 | Seeder Box Lid Assembly | G4-231P |

| Ref # | Name | Part # |
|---|---|---|
| 13 | Drain Cap | G4-221P |
| 14 | Plastic Hose | G4-122 |
| 9-13,17 | Seeder Box Assembly | G4-235P |
| 1-20 | Seeder Assembly | G4-100P |

| Ref # | Description |
|---|---|
| 15 | 3/8"-16 x 1" Wislock Hex Bolt |
| 16 | 3/8"-16 Wislock Hex Nut |
| 17 | #8 1/2" Sheet Metal Screw |
| 18 | 9/16" of 3/16" Square Key Stock |
| 19 | #10 Internal Locking Washer |
| 20 | #10-24 1/2" Allen Screw (Use LocTite) |

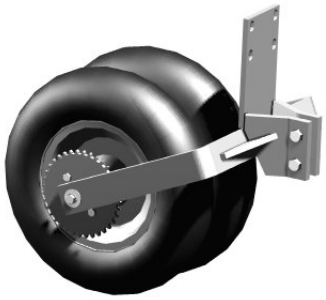

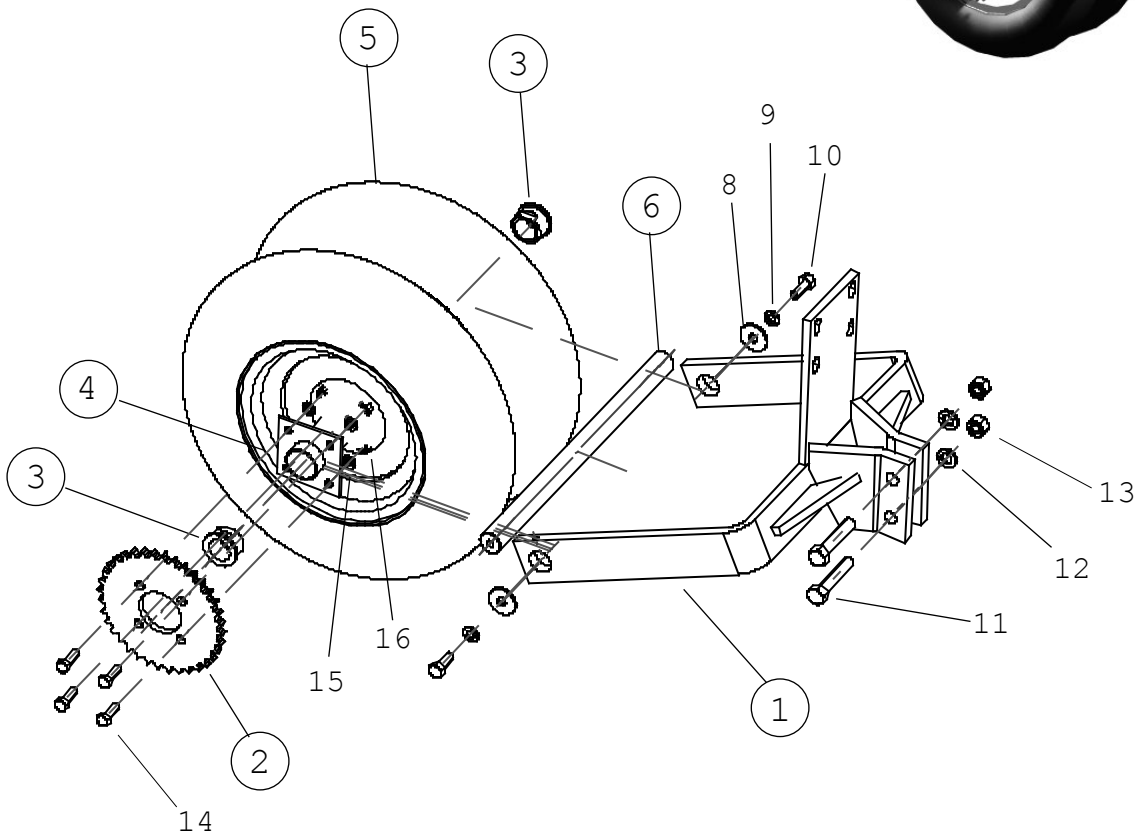


| Ref # | Name | Part # |
|---|---|---|
| 1 | Packer Wheel Bracket | G3-292 |
| 2 | Large Sprocket | G3-283 |
| 3 | Axle Bushing | G3-324 |
| 4 | Packer Wheel Base | N/A* |
| 5 | Packer Wheel Tire | G3-125 |
| 6 | Packer Wheel Inner Axle | G3-177 |
| 7 | Chain (Not Shown) | G3-321 |
| 3,4,5 | Packer Wheels w/Tires | G3-120 |
| 3,4 | Packer Wheels No Tires | G3-121 |
| 1-10, 14-16 | Packer Wheel Assembly | G3-100 |

| Ref # | Description |
|---|---|
| 8 | 3/8" x 1 3/4" Fender Washer |
| 9 | 3/8" Lock Washer |
| 10 | 3/8"-16 x 1" Hex Head Bolt |
| 11 | 1/2" x 2 1/2" Hex Head Bolt |
| 12 | 1/2" Lock Washer |
| 13 | 1/2" Hex Nut |
| 14 | 5/16" x 1" Hex Head Bolt |
| 15 | 5/16" Lock Washer |
| 16 | 5/16" Hex Nut |

All hardware listed is coarse thread (UNC) and Grade 5 or better unless otherwise noted.



*Not Available Separately

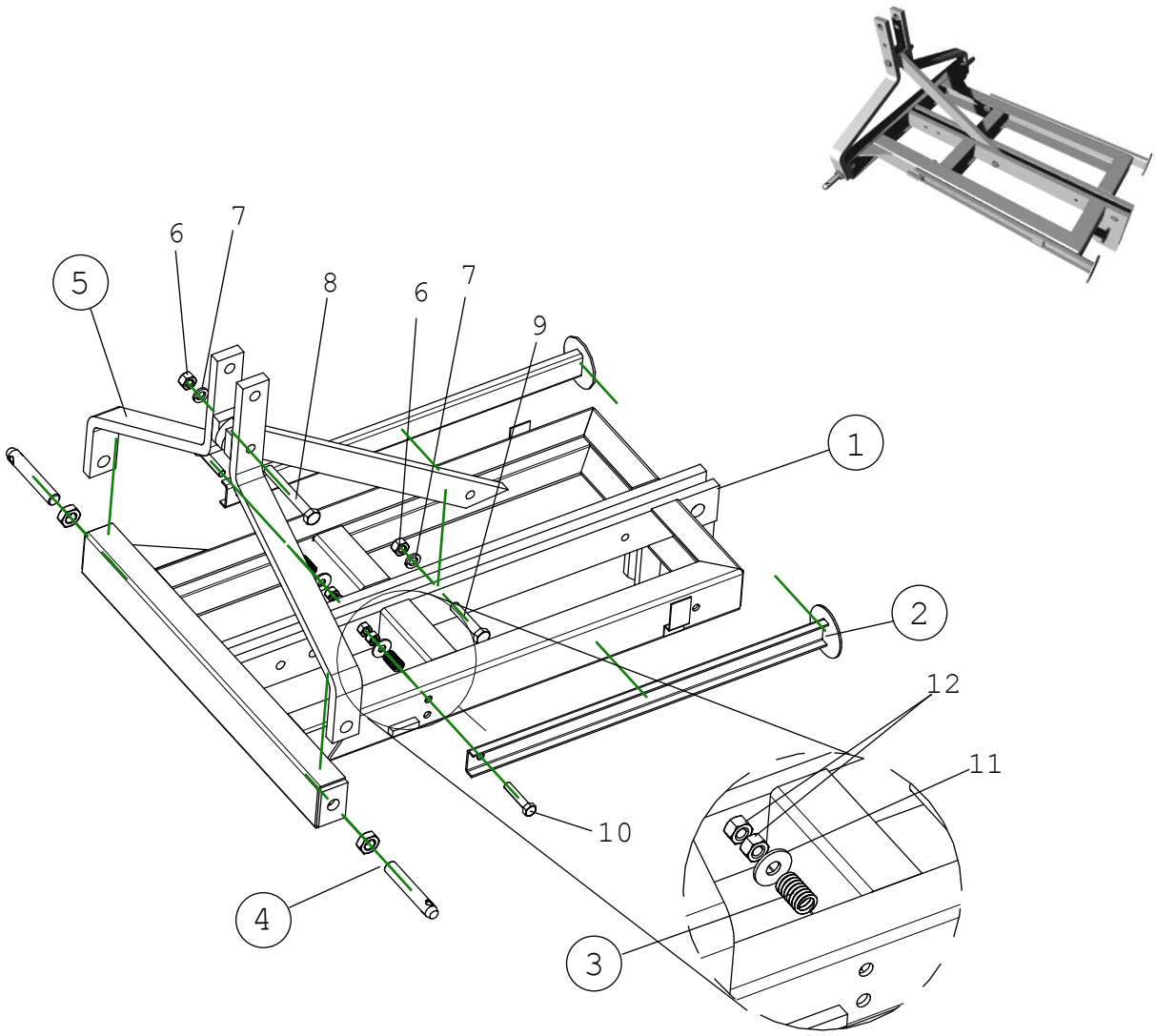


| Ref # | Name | Part # |
|---|---|---|
| 1 | Frame | Call |
| 2 | Leg | G5-254 |
| 3 | Leg Spring | G5-257 |
| 4 | Cat 1 Lower Link Pin | G5-255 |
| 5 | 3-Point Hitch Assembly | G5-271 |

| Ref # | Description |
|---|---|
| 6 | 5/8" Hex Bolt |
| 7 | 5/8" Lock Washer |
| 8 | 5/8" x 5" Hex Head Bolt |
| 9 | 5/8" x 3 1/4" Hex Head Bolt |
| 10 | 1/2" x 2 1/2" Hex Head Bolt |
| 11 | 1/2" Flat Washer |
| 12 | 1/2" Hex Nut |

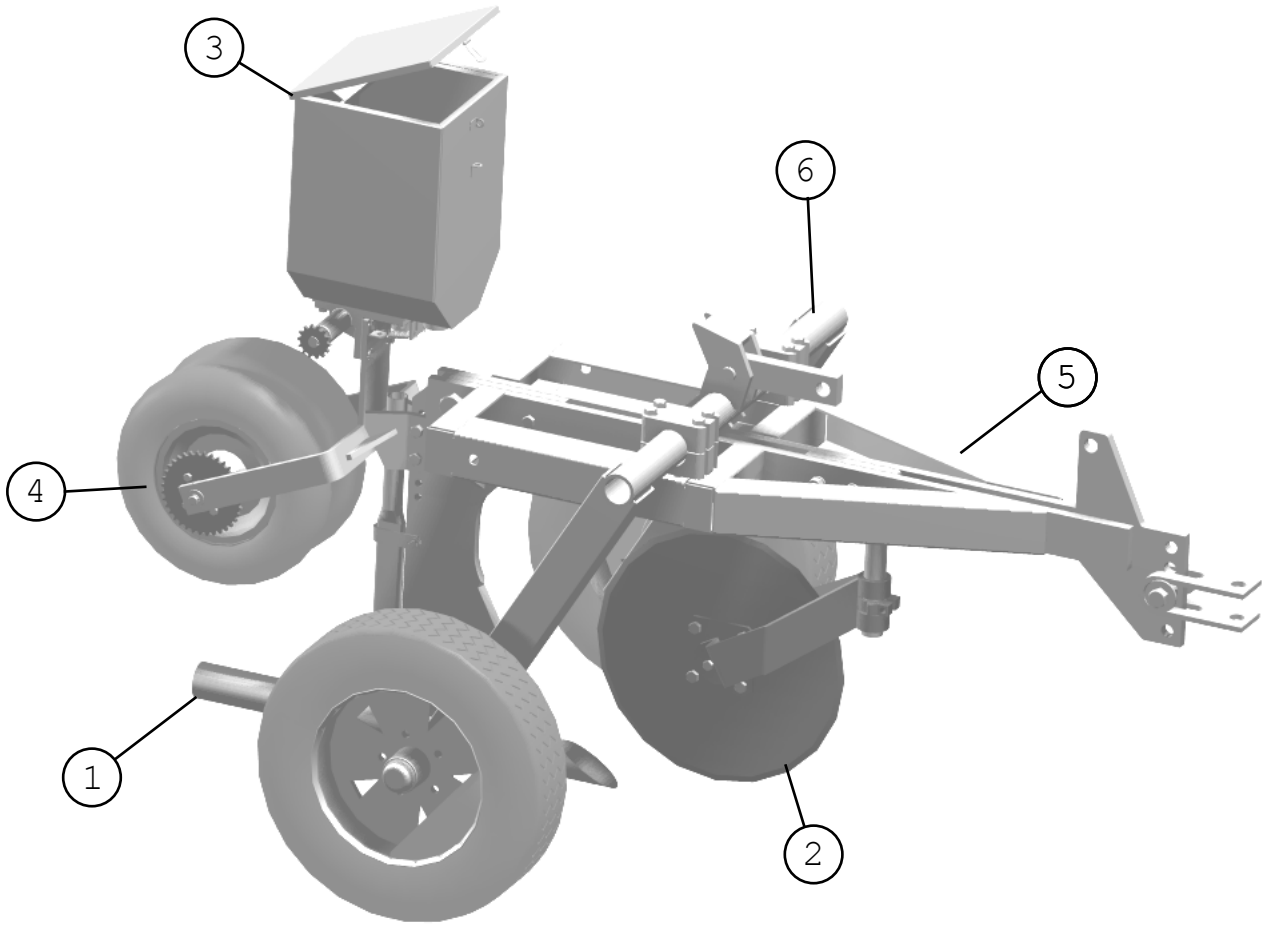


**Assemblies**

| Ref # | Name | Page # |
|---|---|---|
| 1 | Knife Assembly | 1-2 |
| 2 | Coulter Assembly | 1-3 |
| 3 | Seeder Assembly | 1-4 |
| 4 | Packer Wheel Assembly | 1-5 |
| 5 | Frame Assembly | 2-2 |
| 6 | Axle Assembly | 2-3 |

**Common Parts**

| Name | Part # | Page # |
|---|---|---|
| Torpedo Point | G1-105 | 1-2 |
| Coulter Blade - 18" | G2-370 | 1-3 |
| Tire | G3-125 | 1-5 |
| Tripper | G4-269 | 1-4 |
| Knife Assembly (Complete) | G1-100 | 1-2 |

**Please Call Elston Manufacturing for information on purchasing gopher bait (poison).**

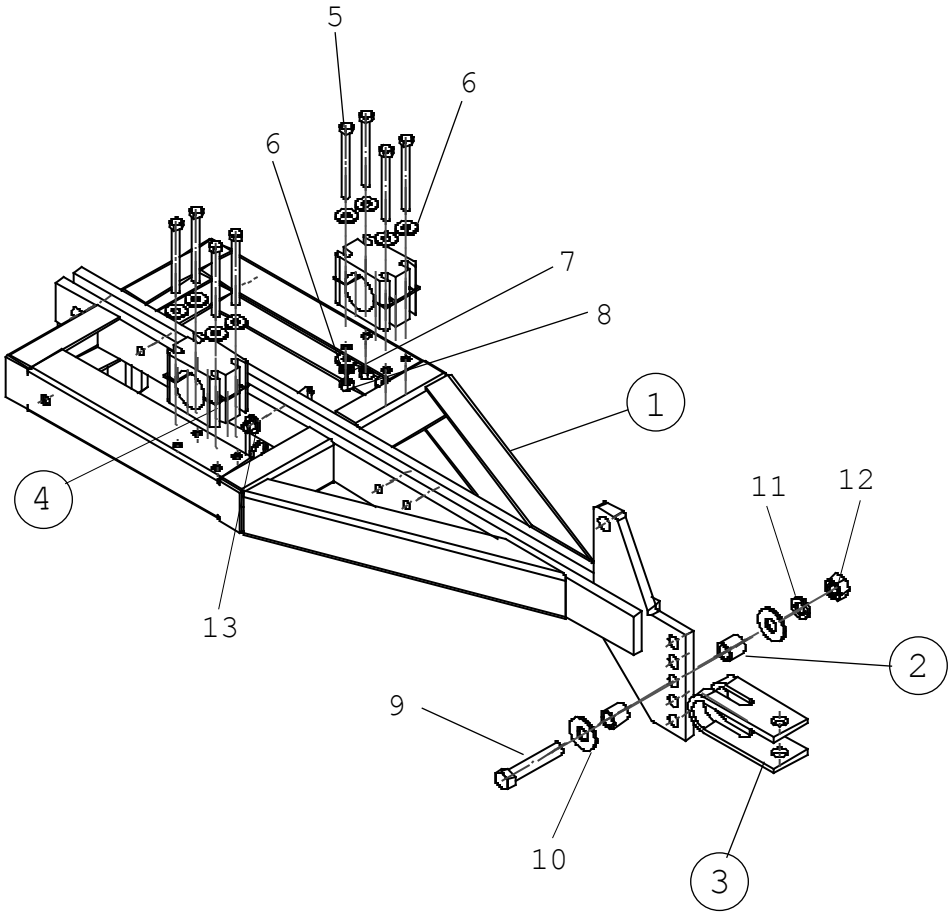


| Ref # | Name | Part # |
|---|---|---|
| 1 | Frame | Call |
| 2 | Spacer | G6-217 |
| 3 | Clevis | G6-102 |
| 4 | Axle Bearing Assembly | G6-118 |

| Ref # | Description |
|---|---|
| 5 | 1/2" x 5" Hex Head Bolt |
| 6 | 1/2" Flat Washer |
| 7 | 1/2" Lock Washer |
| 8 | 1/2" Hex Nut |
| 9 | 7/8" x 4 1/2" Hex Head Bolt |
| 10 | 7/8" Flat Washer |
| 11 | 7/8" Lock Washer |
| 12 | 7/8" Hex Nut |
| 13 | Safety Pin (G6-129) |

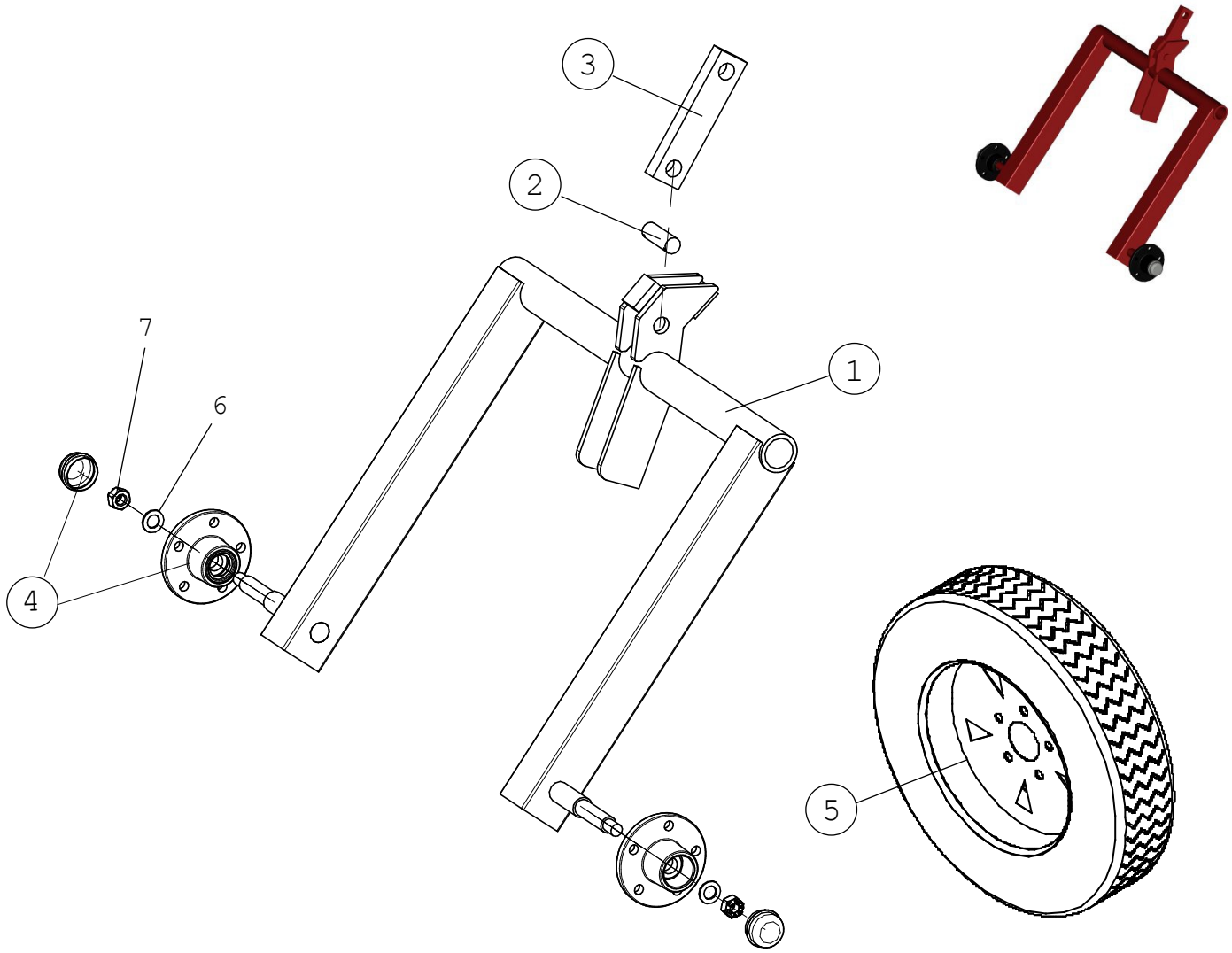


| Ref # | Name | Part # | Ref # | Description |
|---|---|---|---|---|
| 1 | Axle (Complete) | G6-115B | 6 | 3/4" Narrow Flat Washer |
| 2 | Cylinder Pin | G6-184 | 7 | 3/4" Castle Nut |
| 3 | Cylinder Arm | G6-262 | 8 | Cotter Pins (not shown) |
| 4,6,7,9,10 | Hub Assembly | G6-117 | 9 | Lug Bolts (not shown) |
| 5 | Tire with Rim | G6-116 | 10 | 1/2" Lug Nuts (not shown) |

## Blade Hub

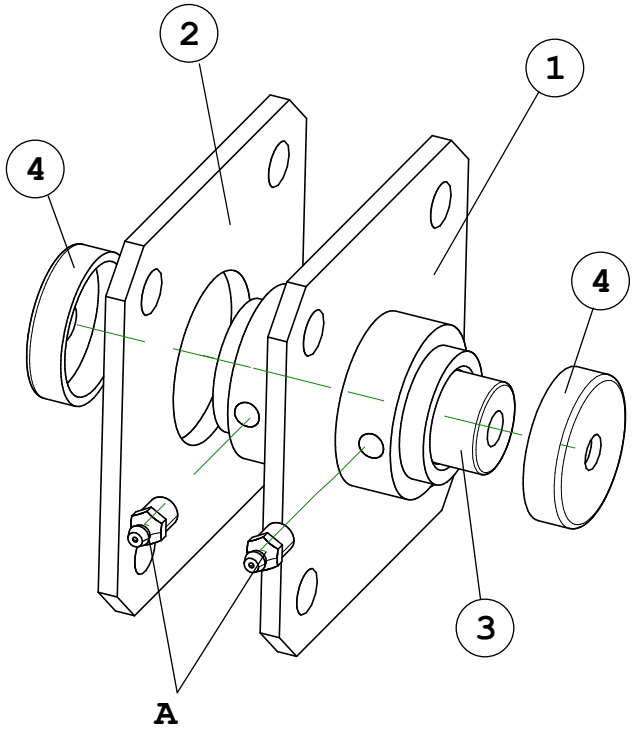


| Label | Name | Part # |
|---|---|---|
| 1 | Blade Flange w/ Hub | G2-381 |
| 2 | Blade Flange | G2-382 |
| 3 | Inner Bearing | G2-383 |
| 4 | Bearing Cap | G2-384 |
| A | 1/4”-28 SAE-LT Grease Fitting | N/A* |

*Not Available Separately