Important: read carefully the use and maintenance instructions contained in this manual before starting any operation. - Machinery Directive 2006/42/EC

WHEEL RAKE
series BATRAKE

TRANSLATION
OF THE ORIGINAL
INSTRUCTIONS

USE AND MAINTENANCE MANUAL

issue 0 – 02.2012

DECLARATION OF CONFORMITY

(Annex IIA Machinery Directives 2006/42/EC)

The Manufacturer **ENOAGRICOLA ROSSI s.r.l.**
with head office in via Cortonese s.n. - 06018
Calzolaro di Umbertide (PG) - Italy

declares under its own responsibility that the machine

BATRAKE WHEEL RAKE

……..
Generic denomination and commercial name

BATRAKE		2010
…….	…….	……
Series/Model	*Serial number*	*Construction year*

whose functions are described in this manual

is conform to the Essential Requirements of Safety and Health Protection, as per Machinery Directive 2006/42/EC and to the Directive 94/20/EC relating to the mechanical coupling devices of motor vehicles and their trailers and their attachment to those vehicles

To check the conformity of the Directives mentioned up here, the following EN Harmonized Norms have been consulted:

EN 349 (1993) **+ A1** (2008) - **EN 982** (1997) **+ A1** (2008)
EN ISO 4254-1 (2008) - **EN ISO 4254-10** (2010) - **EN 11684** (1995)
EN 12100-1 (2003) **+ A1** (2009) - **EN 12100-2** (2003) **+ A1** (2009)
EN ISO 12965 (2003) **+ A1** (2004) **+ A2** (2009)
EN ISO 13857 (2008) - **EN 14121-1** (2007)

and he authorizes mr. Giovannini Massimo
via Cortonese s.n. - 06018 Calzolaro di Umbertide (PG) - Italy

to compile the relevant technical documentation

Calzolaro di Umbertide, ……..

GIOVANNINI ADELMO
……
Legal representative

ENOAGRICOLA ROSSI s.r.l.
06018 Calzolaro di Umbertide Perugia Italia
Tel. (39) 075-930 22 22 - Telefax (39) 075-930 23 28
e-mail: enorossi@enorossi.it - info@enorossi.it
web: http://www.enorossi.it - http://www.enoagricolarossi.com

Machinery Directive and Harmonized norms:

The wheel rake series "BATRAKE have been designed in accordance with the norms described in the Machinery Directive **2006/42/EC** and in Directive **94/20/EC** and particularly it satisfies the following Harmonized norms:

EN 349: Safety of machinery. Minimum gaps to avoid crushing of parts of the human body (1993) **+ A1** (2008)

EN 982: Safety of machinery - Safety requirement related to systems and them components for oleo-hydraulic and pneumatic transmissions - Oleo-hydraulic (1997) + **A1** (2009)

EN ISO 4254-1: Agricultural machinery - Safety - Part 1: General requirements (2008)

EN ISO 4254-10: Agricultural machinery - Safety - Part 10: Rotary tedders and rakes (2010)

EN ISO 11684: Tractors, machinery for agriculture and forestry, powered lawn and garden equipment - Safety signs and hazard pictorials - General principles (1995)

EN 12100-1: Safety of machinery - Basic Principles, general design principles - Terminology, basic methodology (2003) **+ A1** (2009)

EN 12100-2: Safety of machinery - Basic Principles, general design principles - Specifications and technical principles (2003) **+ A1** (2009)

EN 12965: Tractors and machinery for agriculture and forestry. Power take-off (PTO) drive shafts and their guards - Safety (2003) **+ A1** (2004) **+ A1** (2009)

EN 13857: Safety of machinery - Safety distances to prevent hazard zones being reached by upper and lower limbs (2008)

EN 14121-1: Safety of machinery - Risk assessment. Principles (2007)

CONTENT

INTRODUCTION

A1 Information about the wheel rakes

The wheel rake is an agricultural equipment used to harvest every type of forage previously cut into windrows. This equipment can operate only if it is attached to an agricultural tractor equipped with trailer hitch and with rear auxiliary hydraulic quick-release couplings.

Its operation, besides to be hydraulic for the movement of two mobile chassis and of additional central wheel (*kicker wheel*), is obtained for effect of the trailing by the tractor to which it is attached. The consequent rotating movement of the wheels (the main component of the equipment, of which there can be up to 13), allows to form uniform and well aerated windrows. Our **BATRAKE** models, all of trailed type, are equipped with a flexible yet sturdy chassis that adapts perfectly to all kinds of terrain, however steep and rugged and to follows perfectively the their profile.

Information more detailed about the rake operation is described in the relative chapter.

A2 Information about the manual

The company **ENOROSSI** (hereafter mentioned as “Manufacturer”) designed and built the equipment according to the appropriate safety rules with the precise purpose to safe-guard both the personnel operating on the equipment that the whole operative system.

Every rake is supplied with a copy of this manual, which has to be read very carefully before using the machinery. In the manual are described the necessary information about the transport, the use and the maintenance of the equipment as well as the relative safety rules.

Lack of knowledge about its operating system may cause accidents with damages to the operator and to the equipment itself. Therefore, even if the Constructor, after the delivery, provides all the information concerning the wheel rake (operation, use and maintenance) the Customer has to read this manual and to observe the contained instructions.

The manual furnishes the general indications to obtain the best job and safety conditions but the experience and the common sense of the operator result however the most important factors for the equipment operation.

The manual has been written considering the present technical and constructive characteristics of both the models of the rakes and it doesn't consider the similar models already produced. Nevertheless, the Manufacturer would provide to modify the models under production too, with the purpose to improve it or to update it if new norms were emanated in subject (Machinery Directive), without the obligation to update the rakes already produced.

This manual is integrating part of the wheel rake, therefore, it has to be well conserved, clean and complete in every part of it and kept in an appropriate pack, placed on the equipment chassis or in the cabin of tractor, ready for any consultation.

In case of sale of the rake it will be important to verify that the manual is present in its pack. In the case it is missing, it will be necessary to ask a duplicate of it to the Manufacturer.

If during the manual reading, some instructions may occur incomprehensible, it is appropriate to contact the Manufacturer who provides all the desired information. If the manual was translated in another language and part of the contents give rise to controversies, the valid text to refer to remains the one written in the Italian language.

Contained signals in the manual:

IMPORTANT
indicates that the information must absolutely be known by the operator;

⚠ DANGER

indicates a probable situation of danger for the operator or for others (slight accidents or injury) and/or for the reliability of the equipment and, accordingly, the necessity for the operator to use prudence and good sense;

the writing **Note** indicates that the treated matter can make it easier for the operators to carry out their work.

A3 Identification and CE mark

Every equipment is equipped with a identification plate, applied on the fixed chassis, well in sight, on which punched other than the Manufacturer data, also:

- the model (and/or version);
- the serial number ;
- the engine power (kw);
- the total weight (kg);
- the construction year .

ENOAGRICOLA ROSSI s.r.l.
CALZOLARO DI UMBERTIDE - PERUGIA - ITALIA
Tel. +39 075.9302222 - Fax +39 075.9302328

BATRAKE WHEEL RAKE

CE

YEAR	Kg

MADE IN ITALY

MODEL	SERIAL NUMBER	Kw

Such data is necessary for technical assistance and for spares.

IMPORTANT

It is absolutely forbidden to alter and/or erase the data written on the identification plate of the equipment or of those written on the respective plates of the components. The operator is required to verify frequently the legibility of the data and, when this in doubt, to communicate with the Manufacturer. The data will be transferred to a new plate to replace the old one.

The E**C** mark indicates that the Manufacturer has complied with the regulations of the European Community concerning Health and Safety for vehicles of this type known as "**Machinery Directive**". This means that the Manufacturer has designed and built the equipment in accordance with all rules for its use and in order to avoid all possible risks and dangers. Therefore, the wheel rake can freely circulate in European territory only if provided with this mark and relative declaration of conformity.

A4 Main components and technical data

1. Wheel with teeth (independent single element)
2. Arms with hubs
3. Additional central wheel (kicker wheel)
4. Mobile chassis
5. Fixed chassis
6. Hydraulic quick-released coupling
7. Pull bar and drawbar eyes
8. Bearing foot
9. Wheel
10. Opening connecting rod
11. Wheel with tooth (double unit)
12. Mobile chassis locking device

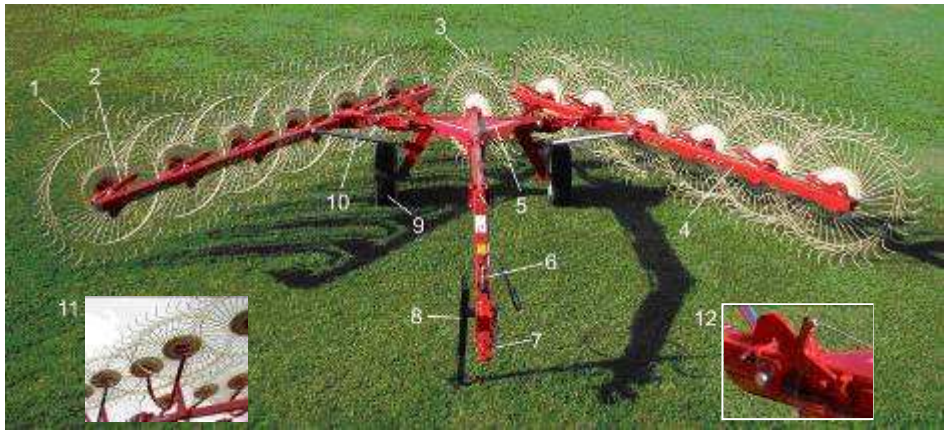

Model	Wheels			Width		Transport lenght	Tractor power	Windrow width	weight
	N°	Teeth	Ø cm	Work mm	Transport mm	mm	hp	min/max mm	Kg
BATRAKE 8	8	40	140	5600	2800	5350	20	950 /2100	650
BATRAKE 10	10	40	140	6600	2800	5850	20	950 /2100	740
BATRAKE 12	12	40	140	7400	2800	6650	30	950 /2100	850

A5 Warranty

The **Enorossi** firm (the Manufacturer) guarantees that all parts of the rake are free of defects as they are all tested before delivery to the Customer. **The warranty is valid for a year from the date specified in the fiscal delivery document, unless arranged otherwise in writing with the Customer.** The Customer, upon receipt of the shipment, must check the components are intact and none are missing. Any claims must be made to the Manufacturer in writing within 8 (eight) days of receiving the rake.

Any components with manufacturing or material defects that cause operating faults within the terms of the Warranty are replaced by the Enorossi firm at no charge and at its own premises. – If the components cannot be replaced at its premises, the Manufacturer will return the defective parts to the Customer's premises. In this case, the Enorossi firm cannot extend the term of the warranty for the time the rake is out of service, nor offer refunds or compensation for expenses or damage, whether direct or indirect. – If the services of one of our technicians are required, the Customer pays for all manual labour and travel expenses. Only the Manufacturer or technician employed by the Manufacturer should inspect the defect.

Please note:

- Defective parts remain the property of the Manufacturer;
- After parts are replaced at the Customer's premises, the defective parts must be returned to the Manufacturer for a technical inspection. The parts must be returned whole, without signs of tampering, and with **carriage paid**;
- if the defective parts are not returned to the Manufacturer within 30 days of receiving the new ones and not according to the requirements stated above, the Manufacturer reserves the right to invoice for the new parts delivered.

The warranty does not extend to:

- Transport as the rake is delivered at the Customer's own risk;
- Faults due to improper or incorrect use of the rake, or due to the operator's own negligence;
- Faults due to normal wear and tear, even when the rake is not in use;
- Delayed notification of manufacturing defects
- Accidents or circumstances outside one's control.

The warranty is forfeited when:

- The rake is used by someone who has not been properly trained;
- The rules and instructions in this manual have not been followed or complied with;
- The necessary maintenance is not carried out;
- The Customer makes changes to the rake without the Manufacturer's written consent, or tampers with the components;
- Any replacement parts are not original or not those recommended by the Manufacturer.

The warranty does not cover parts of the rake not produced by the Manufacturer and the terms for which are stated in the respective contract notes.

IMPORTANT

The Manufacturer cannot guarantee the rake's conformity to all the provisions of the law in force and, in particular, to those on the prevention of accidents and pollution in non-EU countries. It is the customer's own responsibility to ensure the conformity of the rake to the respective regulations. The Manufacturer cannot assume any liability for the customer's non-compliance with the aforementioned regulations and any ensuing disputes or damage.

SAFETY

B1 General rules

This manual describes the safety regulations to be followed when using the rake. As most work-related accidents occur due to non-compliance with the most basic of safety regulations, **it is obligatory** to read this manual before using the rake and to follow all the instructions.

The equipment must be used by qualified adult personnel trained in its use. **The Manufacturer cannot be held liable for accidents due to the operator's negligence and/or non-compliance with the safety instructions. In this case the Manufacturer assumes no responsibility and the warranty is forfeited.**

B2 Safety notes on transport, installation, movement and use

- **Transport** (delivery)**:** the equipment is fully dismantled and placed in a crate for the transport. The Customer can then re-assemble the parts quickly and easily on receipt, following the detailed instructions. If the rake is sold or handed over to another user, the rake can be dismantled by following the instructions in reverse order, although it can also be delivered fully assembled. If the distance and conditions are such that the rake cannot be transported by road hitched to the tractor, it can be easily put on a suitable means of transport, as shown in the figure.

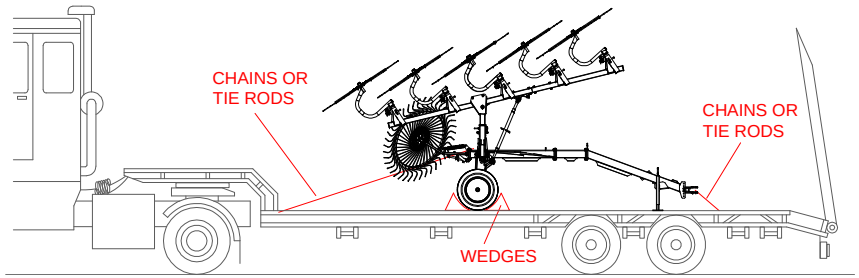

The rake is loaded or unloaded via a ramp attached to the vehicle. The equipment, when ready for transport, is reversed onto the vehicle, then harnessed in place and fitted with all necessary safety devices for transport.

IMPORTANT

Do not forget that, for transportation and handling, the rake must be in its transport configuration as described in the chapter "Moving the rake".

DANGER

Loading and unloading can involve a certain element of risk so must be carried out taking all due precautions.

Always take the following precautions:

- loading/unloading must be carried out on a flat surface and at a safe distance from slopes or ditches;
- always make sure the ramps are strong enough to withstand the rake's weight (stated on the identification plate), are firmly attached to the vehicle and are parallel to each other and perpendicular with the edge of the vehicle;
- ensure the ramps are clean, without any traces of oil, grease or ice;
- never change direction when moving the rake onto or off the vehicle. If necessary, move the rake back down the ramp to turn it around.

- **Installation:** the equipment must only ever be attached to an agricultural tractor equipped with trailer hitch, rear auxiliary hydraulic quick-released coupling, universal three-point hitch and hydraulic lift.

IMPORTANT

The tractor must also, by law, be fitted with a protective roll-bar or ROPS or FOPS cabin. **It is strictly forbidden to install the rake device on a tractor without the required protection equipment.**

Prior to installation, however, the Customer must check the use and maintenance manual of the tractor to make sure the tractor is compatible with rake, and whether ballasts are needed to prevent unbalance that could cause it to tip over.

Instructions on installation of the rake and hydraulic connections are given below.

- **Movement:** this is a trailed rake so must be hitched to the back of an agricultural tractor. The complete vehicle (the tractor with rake) does not require any luminous or acoustic signalling devices or panels when used in cultivated fields. However, you must do the following for road circulation:

  - **rear dimensions:** the operator should affix the relevant signs on the transplanter to indicate the rear dimensions of the tractor. It should be noted that the signs must be affixed on the three visible sides. The signs should be of an approved type, reflective and fluorescent, with red and yellow stripes.

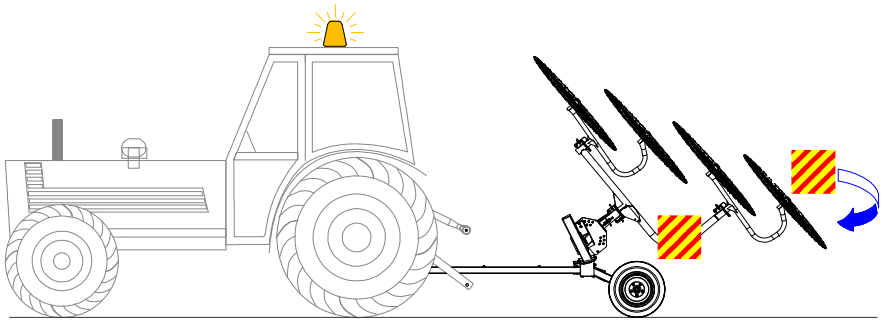

Furthermore, the width of the transplanter should never exceed the one of the tractor. Therefore, the equipment should be placed in the **transport configuration,** as shown in figure. This is essential as the rake can extend up to 8 metres in length when in use.

How to fold the rake in such configuration, if it was also in the work one, it will be necessary:

- start the tractor engine and after a few minutes, to lift the rake mobile chassis (**1**) by acting the auxiliary hydraulic circuit control lever, placed in cabin, up to them will be hooked by respective locking devices (**2**), placed on the fixed chassis and shown in figure.

  Note: *if the kicker wheel is present on the equipment (as shown in figure), after the lifting of two mobile chassis also it will be lifted by a proper jack (hydraulic series connection).*

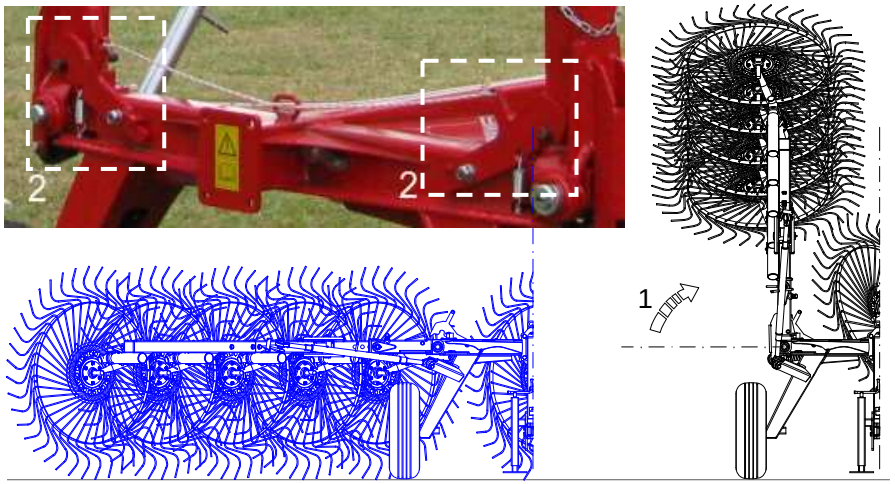

WORKING CONFIGURATION

TRASPORT CONFIGURATION

central wheel
(kicker wheel)

- In case the central wheel is present on the equipment, it is necessary to provide to avoid an its accident fall (due to an accidental extension of its jack) by the application of the proper safety device. A handle pin (**5**), foreseen for such purpose and so applied to the chassis (see figure), will be pulled out from its seat (**3**) removing before the R-pin (**4**) that locks it.

  After that, the handle pin will be inserted in the hole indicated in figure (**6**), and fasten by the relative R-pin.

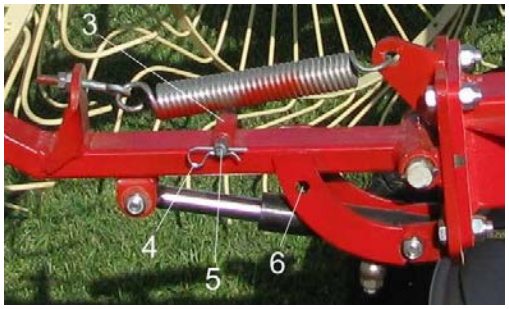

- **signalling devices:** the tractor must always be fitted with a flashing light and be driven at moderate speed, especially on rough roads, as the heavy weight at the back can make it difficult to drive;

- **weight:** the weight of the overall vehicle (tractor with rake) should not be over 30% more than the one of the tractor normal weight as stated on the registration certificate;

- **regulations:** you should be familiar with and observe the road traffic regulations that are currently in force in your country.

The driver in the cabin should take the following precautions when driving and using the vehicle (tractor with rake):

- do not take passengers with you in the tractor;

- do not transport people or animals on the rake;

- it is forbidden to stand between the wheel rake and tractor, even when the parking brake is on and the wheels are chocked;

- before reversing the tractor, always make sure the rake is NOT in its working configuration – if it is, put it in its transport configuration as otherwise the rake could cause or sustain damage;

- **Use:** the rake must only be put to the use for which it was intended and that is to rake up cut forage. **Any other use is therefore improper and forbidden.**

In addition, its technical characteristics must also not be altered in any way to modify performance, **otherwise the warranty will be forfeited immediately and the Manufacturer will refuse all responsibility.**

The rake must be used in conditions of good light and visibility. We recommend you do not work when light and visibility is poor as this can compromise normal levels of safety. Recommence work only when light and visibility has improved.

The rake does not require special maintenance during use as it is not operated directly, being trailed by the tractor; the operator must, however, make sure no persons or animals come too close in the interest of their safety.

In any case, the rake must only be operated by qualified and well trained adult personnel who have read the instructions in this manual. Safety is of prime importance for the personnel operating, repairing or maintaining the equipment. As the instructions given in this manual cannot cover all possible working situations and associated risks, personnel must always act with caution and use their common sense.

The operator must take the following precautions when using the wheel rake:

- the tractor must not be left running or unguarded, not even for short periods. The operator must always switch off the tractor engine and take the key with him;

- the equipment operation is relatively quiet and does not require use of acoustic protection (ear plugs, ear muffs, etc), although this may not be the case with the tractor. We recommend therefore that you check this in the tractor use and maintenance manual.

B3 The operator's responsibilities and safety

Safety is of prime importance for the personnel operating the equipment and each operator is therefore directly responsible for the rake operational check, maintenance, repairs and/or the use of spare parts or consumable materials. This means the aforementioned personnel must never delegate their work to operators without the necessary expertise.

The Manufacturer assumes no liability for:

- improper or incorrect use of the equipment that can cause harm to persons and animals or damage to objects and the actual rake;
- employment of personnel who have not received proper training and/or has not read and understood the instructions in this manual;
- lack of essential maintenance;
- use of spare parts that are not type approved or not compatible with the rake model;

Further to the instruction in this manual, there are adhesive labels (shown in figure) on front part of the equipment to make the job easier for the operators. These labels represent the safety rules to observe and are designed to attract the attention of the operator and indicate the level of risk.

They vary in shape and colour, depending on the rules they are related to. The operator needs to know that circular labels stand for **obligation** (blue and white) or **prohibition** (red, white and black). The triangular labels stand for **danger** (yellow and black). Other rectangular labels emphasise warning of danger and supply more information about the safety rules need to be observed. The rules illustrated by the labels placed on the rake are:

A. **risk of flying objects.** Objects in the field of operation may be caught and thrown by the teeth of the wheel;

B. **risk of snagging.** As the star wheel rotates, there is a risk the teeth will snag on the operator clothes or other objects on the operator body;

C. **obligation** to read the use and maintenance manual;

D. **prohibition** for unauthorized persons to stand or move in the rake working area when it is being used. Persons must keep at a safe distance and should they need to move in the rake working area, they must do taking all due precautions;

E. **risk of crushing and/or cutting upper limbs:** if you need to operate in the area of this pictogram while the tractor is running, you should take all necessary precautions and wear protective gloves.

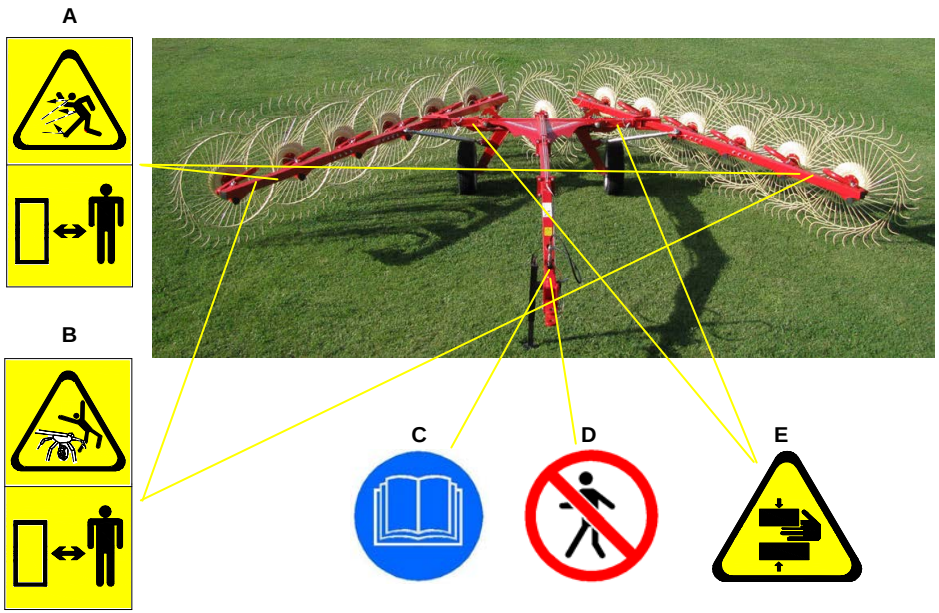

IMPORTANT
The pictograms and instruction labels must necessarily be replaced before they become illegible. If this happens, the operator cannot use the equipment until a new label is applied. Similarly it is utterly forbidden to remove the pictograms or instruction labels placed on the wheel rake. In any circumstances in which this occurs the Manufacturer disclaims all responsibility because the equipment would not meet the safety standards with which it was designed and manufactured.

B4 Noisiness

The wheel rake produces little noise other than that of its moving mechanical parts and has no motor. It is likely to be much quieter than the tractor to which it is hitched. The operator does not therefore need any acoustic protection (ear plugs, muffs, etc.). As for the noise produced by the tractor, you are advised to consult the respective use and maintenance manual.

INSTALLATION

C1 Rake assembly

As aleady said, the equipment is fully dismantled for delivery to the Customer. The rake can be assembled quickly and easily following the easy instructions (see Page 18). Assembly must be carried out on a flat surface prepared especially for the purpose. Assembly operators must be cognizant of the installation safety regulations and work with all due care and attention.

The rake, once it has been assembled, can be installed or hitched to a tractor.

C2 Hitching to the tractor

The rake can be hitched to the attachment of any agricultural tractor. To do so, the operator must approach the tractor to rake slowly to a position where the joints can be easily aligned (**1**), see figure.

IMPORTANT

The holes in the tractor attachment must be aligned with those on the rake attachment (drawbar eyes) with maximum care and attention.

When the tractor is near the rake attachment, the operator turns the handle on the bearing foot (**2**) to lift or lower the pull bar and bring the drawbar eyes parallel with the tractor attachment holes. He can then insert the locking pin (**3**) through the respective holes in the attachments, as shown in figure, and secure it in place with the respective safety pin (**4**).

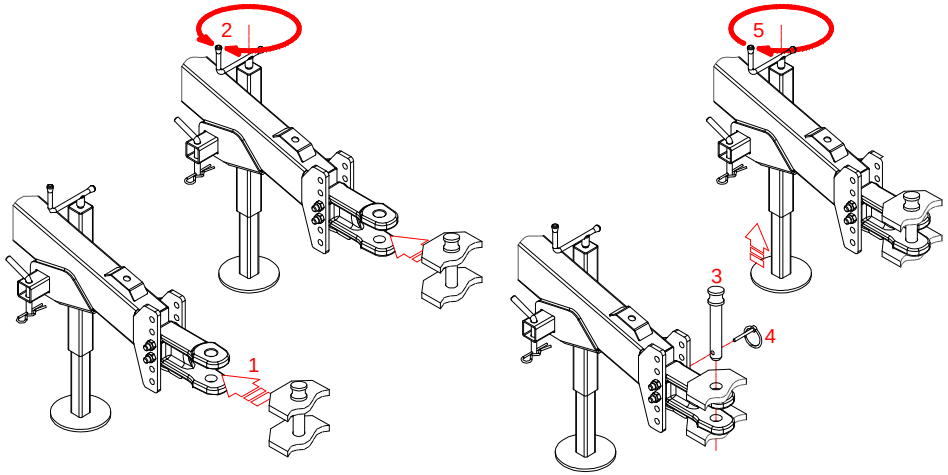

Next, the operator turns the handle (**5**) on the bearing foot to lift the latter as high as necessary to move it from its position to that required for trailing the rake.

To remove the bearing foot: remove the R-pin (**6**), pull out the handle pin (**7**) from its seat and take the bearing foot out of its housing (**8**). Next, turn the foot anti-clockwise (**9**), as shown in figure, and re-insert it in its housing (**10**). Insert the handle pin in its new seat (**11**) and fasten it by its R-pin.

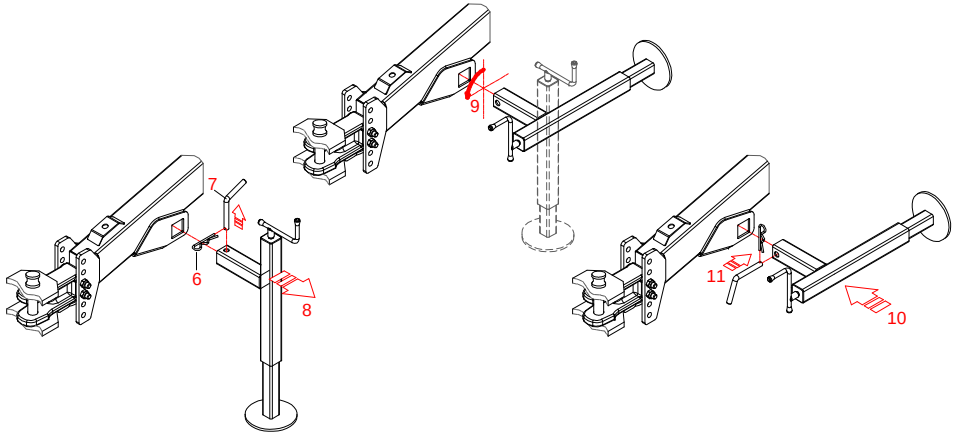

Adaptation to ground of the wheels: on the basis of the height of the tractor tow hook from the ground, any wheels (front or rear) can no touch the ground. To avoid so, it is possible to modify the position of the drawbar eyes on its support. To do so:

- unscrew completely the nuts that locking two fixing screws of the drawbar eyes, shown in figure;
- pull out the screws from their seats and move the drawbar eyes upward or downward, as shown in figure;
- re-insert two fixing screws and lock them by tightening of the relative nuts.

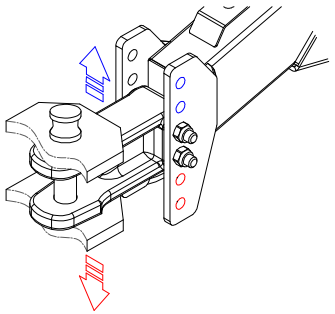

(Instructions valid only for the BATRAKE 8 model) - before any movement of the rake, it will be necessary to lift its **rear bearing foot**, shown in figure. To do so:

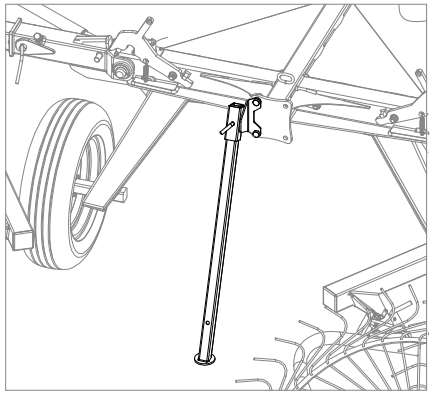

- pull the R-pin that fastens the handle pin;
- pull out the handle pin from its seat;
- scroll up the rake bearing foot until to its lower hole will result aligned with the one on its seat;
- re-insert the handle pin and fasten it by its R-pin.

C3 Hydraulic connections

The hydraulic jacks serve to lower and lift the two mobile chassis and, if available, the central kicker wheel, for setting up the rake in its transport or working configuration. The jacks are powered by the tractor auxiliary circuit and controlled by means of the respective lever in the driver cabin. The piping of the jacks (fitted with quick-released couplings, as shown in figure) must therefore be connected to the respective points on the tractor auxiliary circuit.

C4 Removal

To remove the rake from the tractor, follow the above instructions in reverse order. The hydraulic connections have to be removed before the actual rake.

C5 Storage of the wheel rake

The Customer must set aside a large and easily accessible area on his premises where the rake can be stored. How to store the rake:

- park the rake in a safe area set apart for the purpose. The area must be flat and even;
- lower the front bearing foot, by turning its handle, until to its circular plate results securely on ground.
- **(instructions valid only for the BATRAKE 8 model)** – lower the rear bearing foot as follows:
  - pull the R-pin that fastens the handle pin;
  - pull out the handle pin from its seat;
  - scroll down the rake bearing foot until to its lower hole will result aligned with the one on its seat;
  - re-insert the handle pin and fasten it by its R-pin.
- detach the rake from the tractor, following the instructions in paragraph C2 and C3 in reverse order;
- place protective material over the rake.

OPERATION and USE

D1 Preliminary information

Suitable and optimal use of the rake not only helps avoid accidents but is also the only way to ensure high yield and make use of the rake full potential and performance.

As already said, the rake must be used by a skilled adult operator trained in its use and operation. The operator must therefore have read and fully understood all the instructions in this manual as well as those on the labels and all safety regulations. This is to ensure the safety of the operator, other people and the rake.

Before starting the tractor, you should always take the precautions described in paragraph B2 under the heading “Use” and in paragraph C2 “Hitching to the tractor” and perform the following preliminary checks:

- make sure the rake is properly fitted to the tractor;
- make sure all the parts of the rake are in their intended position and are securely fitted;
- perform the daily maintenance checks described in the respective paragraph. **Note**: should the rake be returned to service after a long period of inactivity, make sure it is in perfect condition and that it has not been damaged in any way by poor weather or storage conditions.

D2 Operation and Use

The rake must be taken to the working area according to the instructions in paragraph B2 under the heading “Moving the rake”. In the working area, the operator should then do the following before using the rake:

- the equipment must take the working configuration in the following way:

  a. **if the kicker wheel is present on the rake:** allow its lowering by removing the associate safety device. Pull therefore the R-pin (**4**) and pull out the handle pin (**5**) from its seat (**6**).

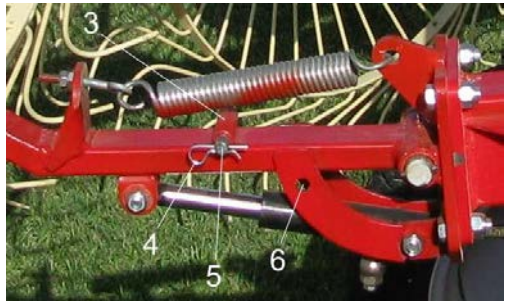

Insert the handle pin in its new seat (**3**) and fasten it by its R-pin.

b. In the tractor cabin, the operator start the engine and after a few minutes, pull at the same time the two cords (**1**), to unlock the two mobile chassis from the respective locking devices (**2**);

c. Start the tractor engine and after a few minutes, by acting on the control lever of the auxiliary hydraulic circuit, to close further the mobile chassis of the rake and at the same time to pull the two cords (**1**), to unlock the mobile chassis from its locking devices (**2**);

d. in the tractor cabin, the operator lower the rake mobile chassis (**3**) by acting again the control lever of the auxiliary circuit, up to that the wheel teeth will have touched the ground. **- if the kicker wheel is present on the rake:** after the lifting of two mobile chassis also it will be lifted (**4**) by a proper jack;

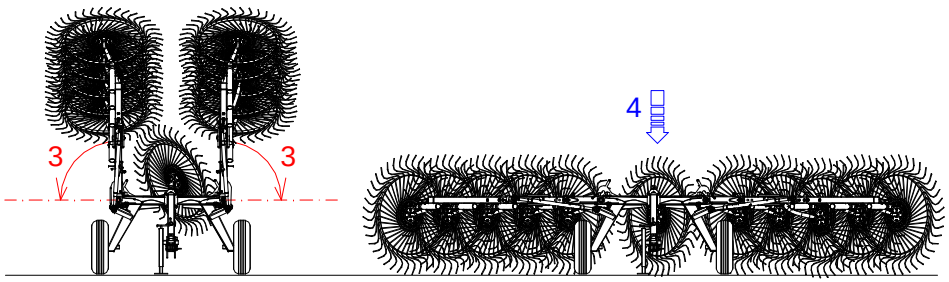

Note: *If necessary, it is possible to lower just one of the two mobile chassis. To get it into its particular working configuration, shown in figure, it will be enough to pull only the cord attached to the locking device of the mobile chassis that the operator intends to lower. In the same way, if the kicker wheel is present on the rake, the operator will can decide to work with or without it. To do so, it will be enough to remove its locking device (as described at the point a) or to leave the equipment in the transport configuration.*

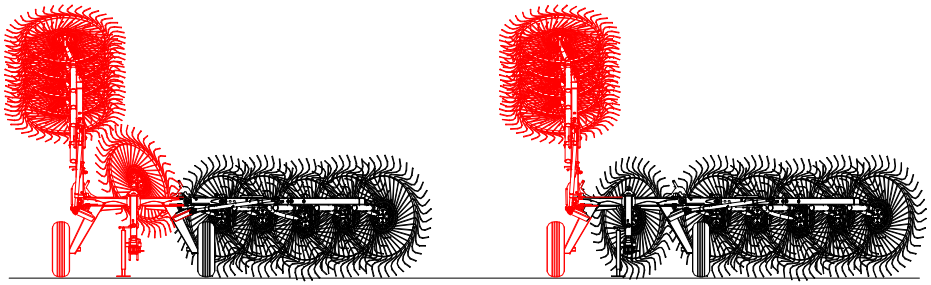

- The wheel rake is ready for the working process since its wheels (respect to the tractor advancing direction) have already a determinate inclination.

D2.1 Working process (swathing)

IMPORTANT

The operator will check for any people or animals in the immediate vicinity or in the working area before boarding the tractor; if there are, he will move them to a safe distance.

After which, the operator gets in the tractor cabin, starts the engine, releases the parking brake and can begin the working process.

The rake is extremely easy to use in that it just has to be hitched onto the tractor and then trailed in the required direction. In this way, the teeth on the wheels are pulled along the surface of the ground as the rake is trailed and by turning effect of the wheels form regular and uniform heaps of hay or forage called **swaths** or **withdraws**.

Note: *as already said, it is also è possible to form lateral swaths when required for particular working process. See the previously paragraph D2 (step c) to bring the rake in this working configuration.*

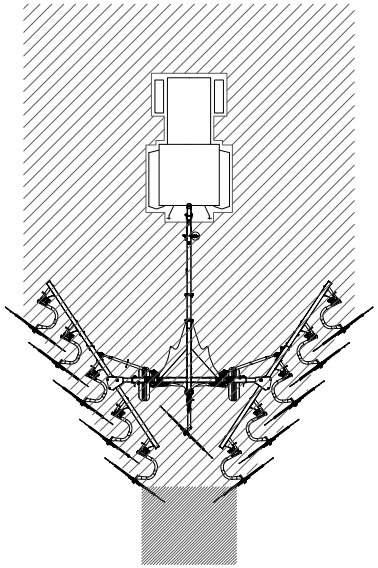

The additional central wheel (called **Kicker wheel**) serves to move the hay or forage in the area where the swath is formed. Such wheel can be installed only in the rear part of the fixed chassis. It is supplied with an assembly kit and only on request (**optional**).

So as for the mobile chassis, during the working or transport phase, also it will be lowered or lifted by a proper jack.

IMPORTANT

The tractor must be driven in a more or less straight line. To **change direction** a few metres before the end of the field, the operator needs to use the controls to lift the mobile chassis, and the kicker wheel if available, as in transport configuration.

For the change direction it will be not to lock the mobile chassis nor, then, to pull the cords of the respective locking devices (**3**). Since these devices have been designed and built with a particular extension of their hooks (**2**) just to do as final

and support point at relative pegs (**1**) of each mobile chassis. Such solution has been performer to make more practical and quick the lifting and the lowering of the mobile chassis, during the change direction, and consequently to avoid to pull two times the cords within a few minutes.

DANGER **In order to not damage one or both locking devices, the operator will must verify that the operating hydraulic pressure not be upper than 180 bars.**

After changing direction, the operator can lower the mobile chassis, and eventually the kicker wheel if available, to continue the working process.

Prior to work breaks (even short ones) the operator must always:
- switch off the tractor engine;
- engage the parking brake;
- place the gear lever in neutral position;
- remove the keys from the dashboard.

When the operator has finished work for the day, he must return the rake to its transport configuration before returning the tractor to its parking area.

Rake storage instructions are given in paragraph C5.

D2.2 Adjustment of the swath formation

- **Inclination of the mobile chassis:** by increasing or decreasing the inclination of the mobile chassis, respect to the tractor required direction, is modified the swath formation. So that at a minor inclination of the mobile chassis corresponds a decreasing of the harvesting area and so a swath formation more large.

  To adjust the inclination of the mobile chassis respect to the tractor required direction, the operator will must intervene, in the same way, on the levers of the apposite adjusting tie-rods, shown in figure.

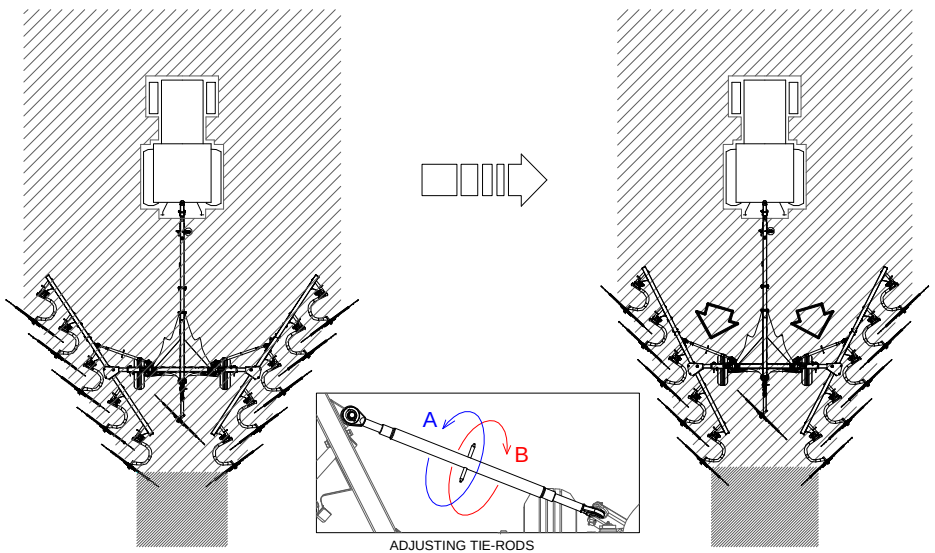

ADJUSTING TIE-RODS

By rotating clockwise one of levers (**A -** see figure), the respective tie-rod is screwed determining the mobile chassis closure and so a decreasing of its inclination. By rotating in opposite direction the lever (**B -** see figure), the tie-rod is unscrewed and consequently the mobile chassis opening determines the increasing of its inclination.

- **Telescopic extension of the mobile chassis:** the swath formation can be also modified by increasing the telescopic extension of the mobile chassis so a sto leave unchanged their inclination respect to the tractor required direction.

  The telescopic extension will be obtained by acting on the mobile chassis in the same way and before on the one hand and then on the other hand. It will be enough to remove the safety pin (**C**) and pull out the handle pin (**D**) from its seat. After which the mobile chassis (included the wheels) will be manually pulled at the required point and locked in this position by inserting the handle pin and the application of the relative safety pin.

  To act than on the respective tie-rods to give at the mobile chassis their previously inclination.

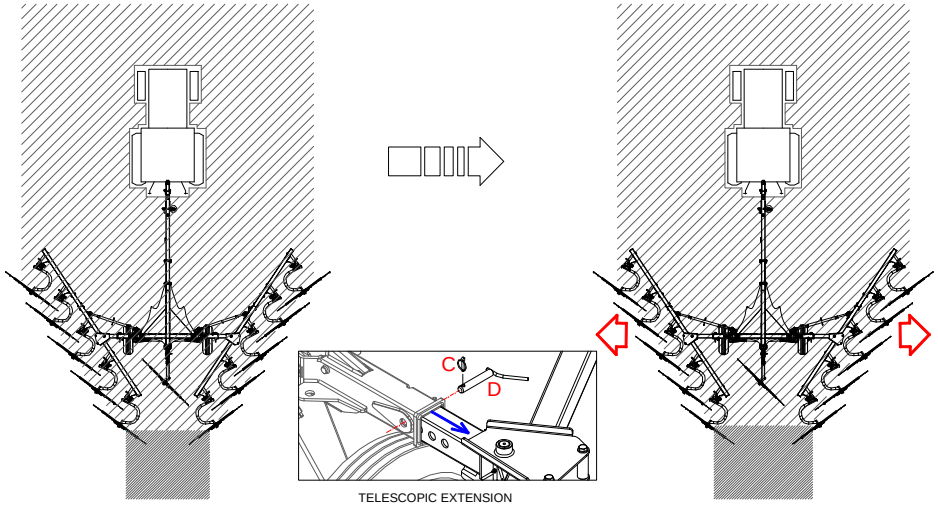

D2.3 Adjustment of the wheel ground pressure

- **Single and double wheels:** in order to uniform the wheel ground pressure it is necessary that the mobile chassis, on which the wheels are installed, are parallel to the ground. To do so, the operator will must adjust the tension of the springs present on the lifting jacks of the mobile chassis.

  Therefore, on each jack to loosen the lock nut (**3**) and then to act on the relative adjusting nut (**2**).

  By screwing the nut in **A** direction, the spring is compressed and than it causes a decreasing of the wheel ground pressure. Instead, by unscrewing the nut in B direction, the wheel ground pressure is increased. – Tighten again the lock nut (3).

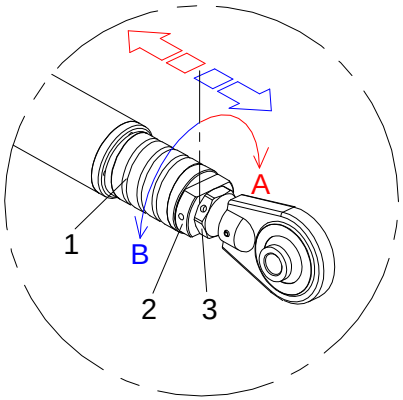

- **Single wheel:** they are equipped with a proper device adjusting further them ground adaptation and so in independent way. Such adjustment is performed on an apposite spring device, shown in figure. By rotating clockwise the device **1,** that is by screwing it, the pin **3** is lifting and in turn it compresses the spring **2**. This compressing causes a decreasing of the wheel ground pressure. By unscrewing the device 1, the pin 3 is lowered causing a spring decompression and so an increasing of the wheel ground pressure.

Note: *if it is necessary to reduce at the minimum the ground pressure of one or more single wheels, the 1 device can rotate to a certain extent, because its rotation is impeded by the spring (**fig. a**).*

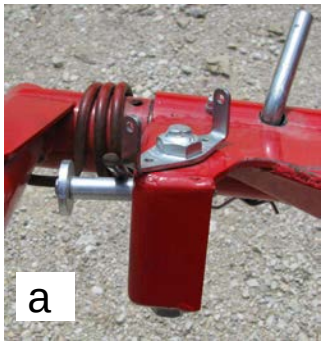

To rotate further the 1 device, to proceed as follows:

a. *Remove the handle pin locking the wheel to the chassis, before pulling out the relative R-pin (**fig. b**);*

b. *Rotate upwards the wheel so to lift its spring too (**fig. c**);*

c. *Rotate the 1 device until the required step (**fig.d**), then to again lower the whell chassis and lock it by inserting the handle pin and the relative R-pin.*

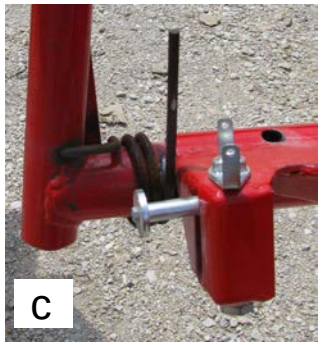

D2.4 Locking of the mobile chassis

The mobile chassis must be always result rigidly locked to the one fixed. If between the tubulars of the respective chassis there is a little tclearance, the operator will must right away reinstate its locking. The tightening of the respective screw (because there are two, one for each chassis and shown in figure) will again locks the mobile chassis to the one fixed.

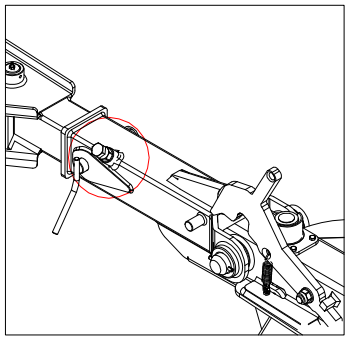

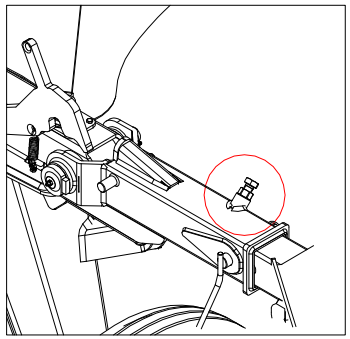

MAINTENANCE

E1 Maintenance instructions

The Manufacturer has drawn up a rake maintenance schedule based on functional tests. This schedule, if followed assiduously by the Customer, can maintain the rake working efficiency and capacity without risk of damage. The operator, who must be a qualified technician of working age, must follow these rules:

- all maintenance and repairs must never be left unfinished or postponed;
- the operator must never rely on his memory alone, but always read and follow the instructions in this manual without fail;
- the operator must install a "**Maintenance in progress**" sign in a prominent position on the tractor dashboard before starting work. This ensures the operator's safety and can prevent damage to the rake;
- all maintenance must be carried out on a flat and well lit surface, with the rake standing in a stable position and the tractor at standstill, with the parking brake applied, the engine off and the keys removed from the dashboard;
- tools for maintenance must be used in accordance with relative accident prevention regulations. Equipment must not, therefore, be put to improper use, e.g. do not use petrol instead of detergent, or pliers instead of a wrench;
- only use spare parts that are type approved or recommended by the Manufacturer.

After maintenance or repairs, always clear the area of any water, oil, grease, dirty cloths, tools and any other material.

IMPORTANT

Take extra care when checking for leaks of pressurized fluid as the fluid can leak out of tiny, virtually invisible holes, burn through skin and cause serious infections. You must therefore use safety glasses with side protection and a piece of cardboard or wood to look for leaks.

E2 Programmed maintenance

Programmed maintenance is purely informative and depends on normal operating conditions. It may therefore differ in relation to the type of service, working environment (which may be dusty), the season, etc. Maintenance should be stepped up the tougher the machine operating conditions.

E2.1 Preliminary check

Before using new wheel rake, it is necessary to lubricate the shaft using grease zerk 1 (see fig. Below). Repeat the lubrication every week.

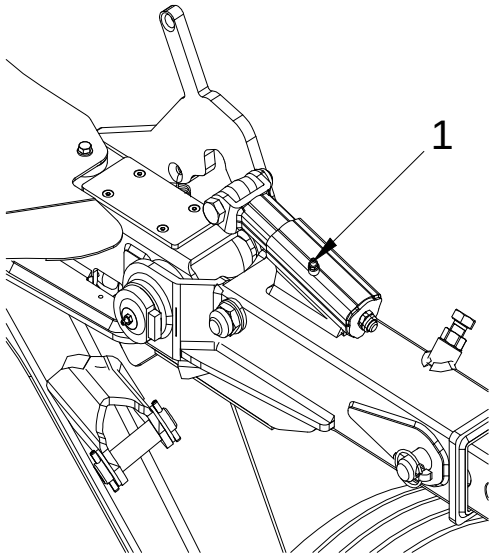

E2.2 Daily checks

Checks to be carried out on a daily basis before starting work:

- check condition of all the fittings (tightness of connections, condition of sleeves and leaks or overflowing of hydraulic oil);

E2.3 Checks on a weekly basis or per 50 operating hours

Checks to be carried out on a weekly basis or per 50 operating hours:

- check condition of all the labels;
- check condition of all the fittings (tightness of connections;
- condition of sleeves and leaks or overflowing of hydraulic oil);
- check the fasteners and safety devices are all fitted and in good condition;
- make sure all the nuts and bolts are properly fastened;
- check condition of the entire structure.

E3 Lubrication

To top up the greasers, remove their protection caps (if present), remove all traces of dust and then use the pump to inject the grease. Afterwards, use a cloth to remove any excess grease on the greasers. Use a brush to apply grease wherever there aren't any greasers. Use only the type of grease recommended by the Manufacturer. All the top-up points are marked with labels like the one illustrated.

Use only the type of grease recommended by the Manufacturer. All the top-up points are marked with labels like the one illustrated.

IMPORTANT

To avoid pollution, it is strictly forbidden to dispose of oil, lubricants, filter cartridges or other noxious materials in the environment. Comply with all regulations in force on the disposal of liquid and solid substances.

E4 Replacing a wheel and/ or its teeth

Wheel : If you need to replace a wheel, fully undo the six retainer nuts (**1**), undo the respective screws (**5**) and remove the wheel from its coupling (or hub).

Put on a new wheel, do up the six screws and then also the respective nuts.

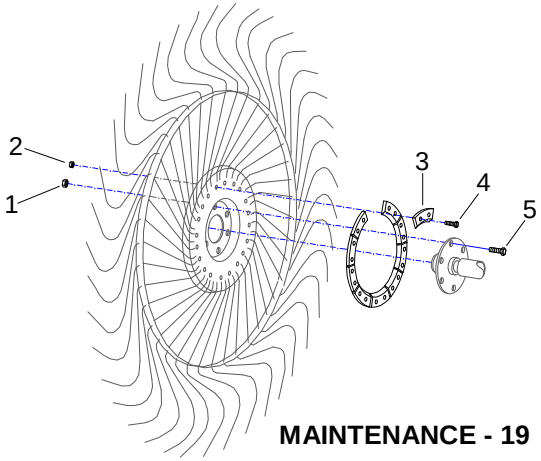

Teeth: if you need to replace one or more of the teeth (being worn or broken), you must remove the respective retainer plate (**3**). To do this, fully undo the two retainer nuts (**2**) and the respective screws (**4**). You can then remove the plate and teeth.

Put in the new teeth, reinstall the plate, then do up the two retainer screws and respective nuts.

E5 Troubleshooting

The jack activation command does not respond	Hydraulic oil level low Hydraulic system piping is damaged Hydraulic pump is damaged Filter is clogged	Top up oil level Replace piping Replace pump Replace filter
The jacks only move intermittently	Air in the hydraulic circuit	Operate the pump at no load for a few minutes, using the jacks, to expel any air in the hydraulic circuit
The jacks move even when the command is not given	Jack seals are worn out	Replace seals
Overheated oil	Filter is clogged Pipes are crushed Oil level low	Replace filter Check and replace Pipes Top up oil level
Oil loss	Slow connection Worn out seal	Squeeze the pipe Replace the seal

Note: *contact the Manufacturer about any faults or trouble not mentioned in the table.*

E6 Machine demolition: disposal of materials

When the rake is placed out of service, you must make harmless all parts that could pose a safety risk to persons, animals and the environment when sent for disposal. Materials that make up the rake and should be set aside for segregated disposal are:

- steel
- iron
- hydraulic oil
- rubber
- plastics

These materials must be disposed of in compliance with the associated national legislation in force.

Assembly n°01

BATRAKE 8

A) Connect the drawbar Pos. 2, to the carriage Pos. 1, using the four M16x45 T.E. screws Pos. 3 and M 16 self-locking nuts Pos. 4, inserting the eye-bolt Pos. 5 in between the two parts.

BATRAKE 10

B) Connect the drawbar Pos. 2/A to the L. 500 extension Pos. 6 and carriage Pos. 1, using the eight M16x45 screws Pos. 3 and M 16 self-locking nuts Pos. 4.

BATRAKE 12

C) Connect the drawbar Pos. 2/A to the L.1300 extension Pos. 7 and carriage Pos. 1, using the eight M16x45 screws Pos. 3 and M 16 self-locking nuts Pos. 4.

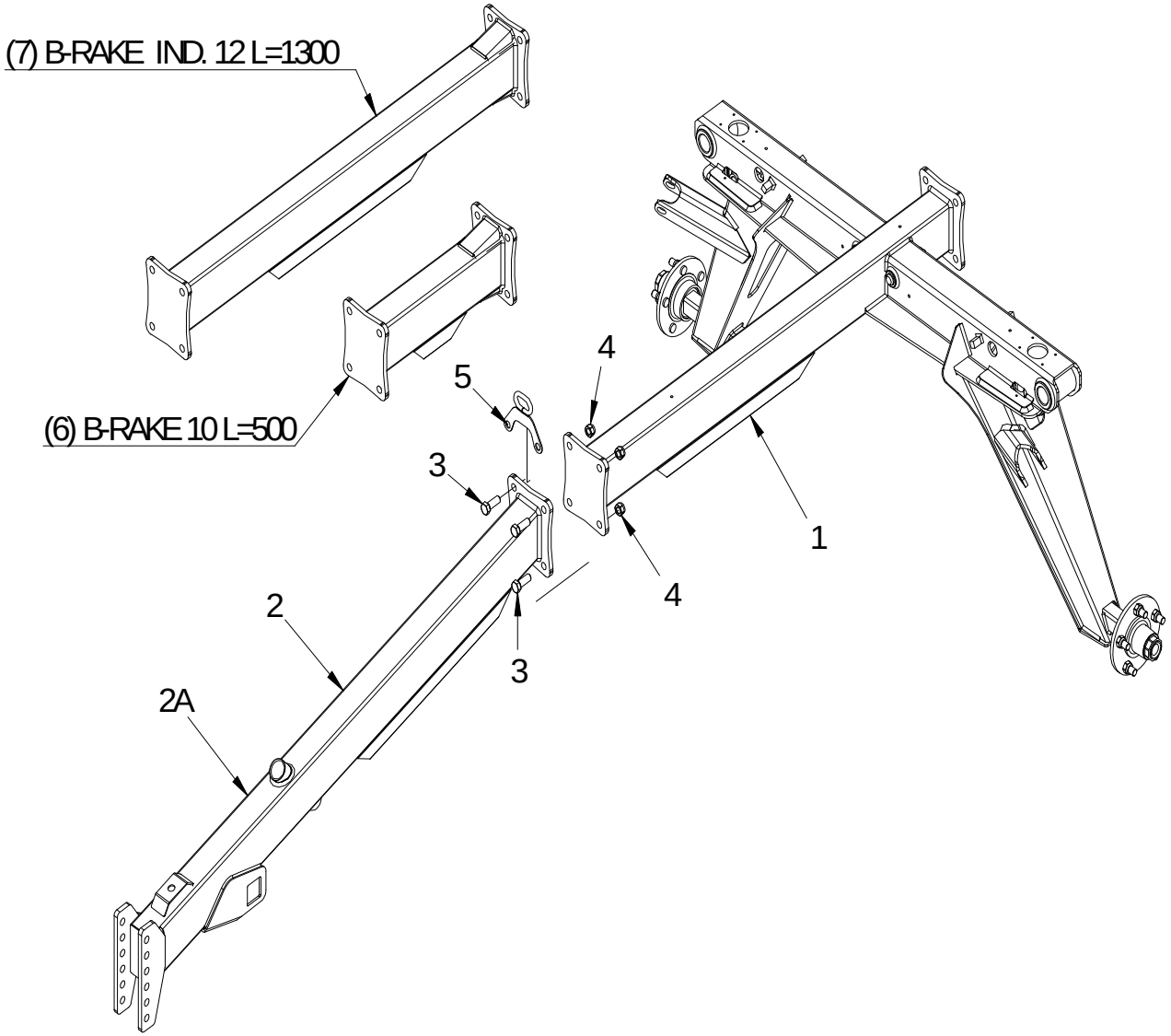

Assembly n°02

A) Using a fork-lift truck, raise the machine already fitted with drawbar above the ground (SEE ASSEMBLY N°01). The front part of the drivebar must still rest on the ground in the interest of stability.

B) Install the two wheels Pos. 8 and fasten on the nuts Pos. 9.

C) Install the foot Pos. 10, fastening it on with the Ø 15 pin Pos. 13. Fasten the pin with the safety pin Pos. 14.

D) Install the drivebar coupling Pos. 11 and fasten it on with the two M16x130 T.E. screws Pos. 12 and M 16 self-locking nuts Pos. 9.

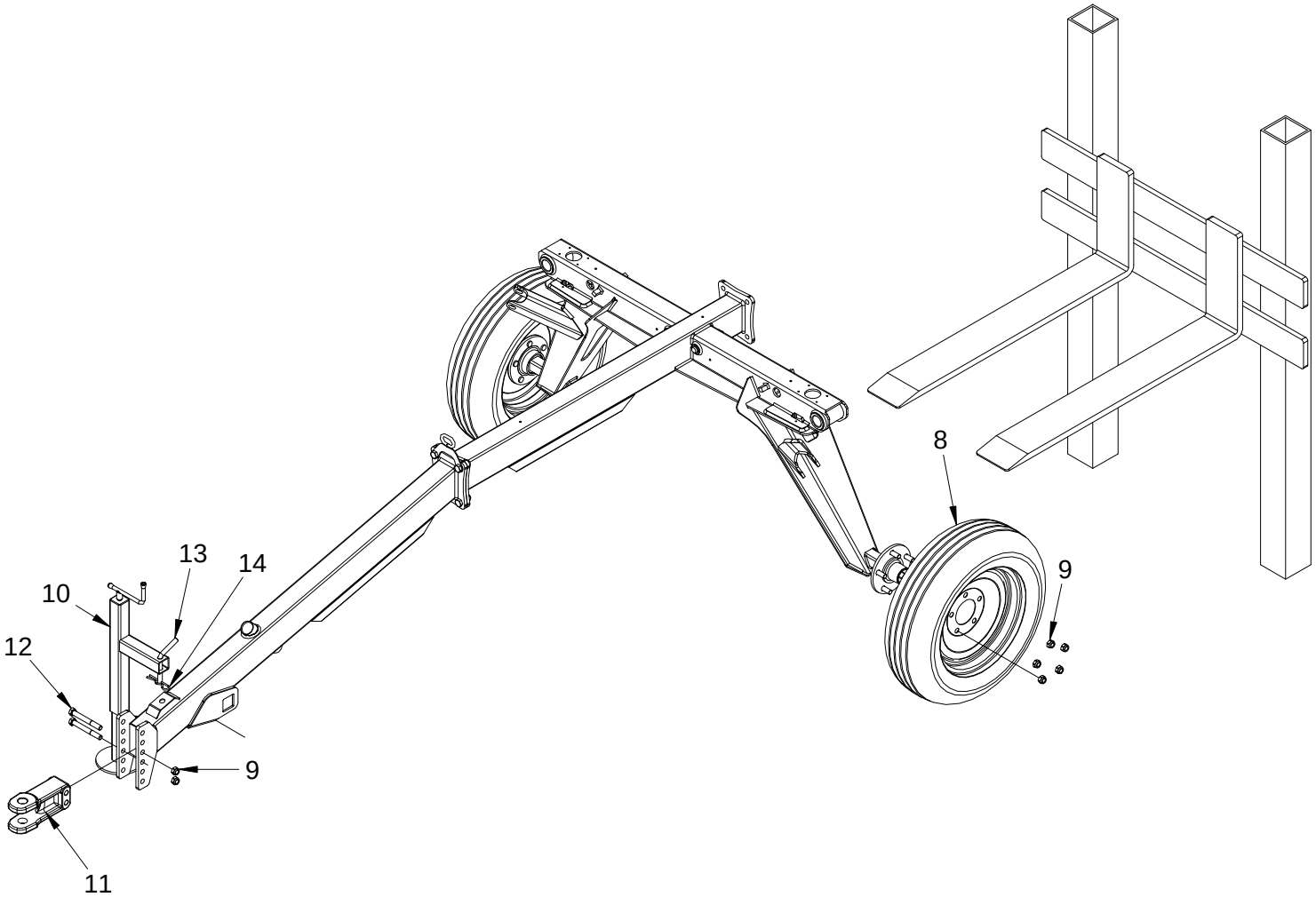

Assembly n°03

A) Insert the inner left-hand frame arm Pos. 15/A, in the left-hand frame arm Pos. 15 and fasten it with the Ø 25 L.135 pin Pos. 21 and latched plug Pos. 22.

B) Install the left-hand frame arm Pos. 15 (with the inner part Pos. 15/A already installed), fastening it onto the carriage with the Ø 40 L. 222 pin Pos. 16. Fasten the pin with the Ø 6x60 elastic pin Pos. 17.

C) Insert the Ø 19 L. 94 pin Pos. 18 in the articulated support of the stem of the hydraulic cylinder Pos. 20.
Fasten the pin with Ø 6x36 elastic pins Pos. 19.

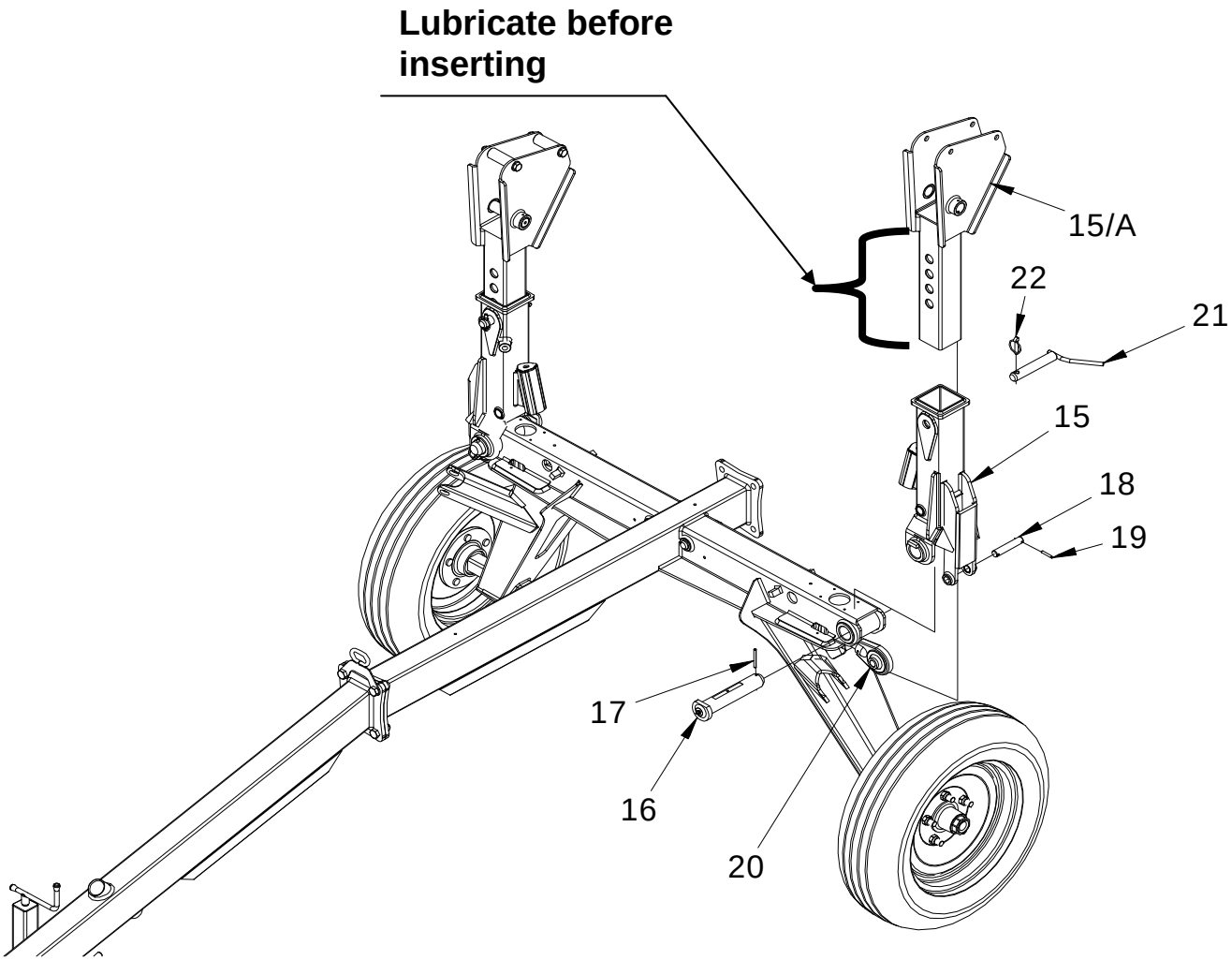

Assembly n°04A

A) Fasten plate 39° on frame using the 4 screws
M6x16 Pos.40A.

B) Insert spring Pos.38A on shaft Pos.34 and fasten with self locking nut M12.
Insert roll Pos.35 on shaft and fasten with pin Pos.35, Screw Pos.36 and self locking nut M16 Pos.37.

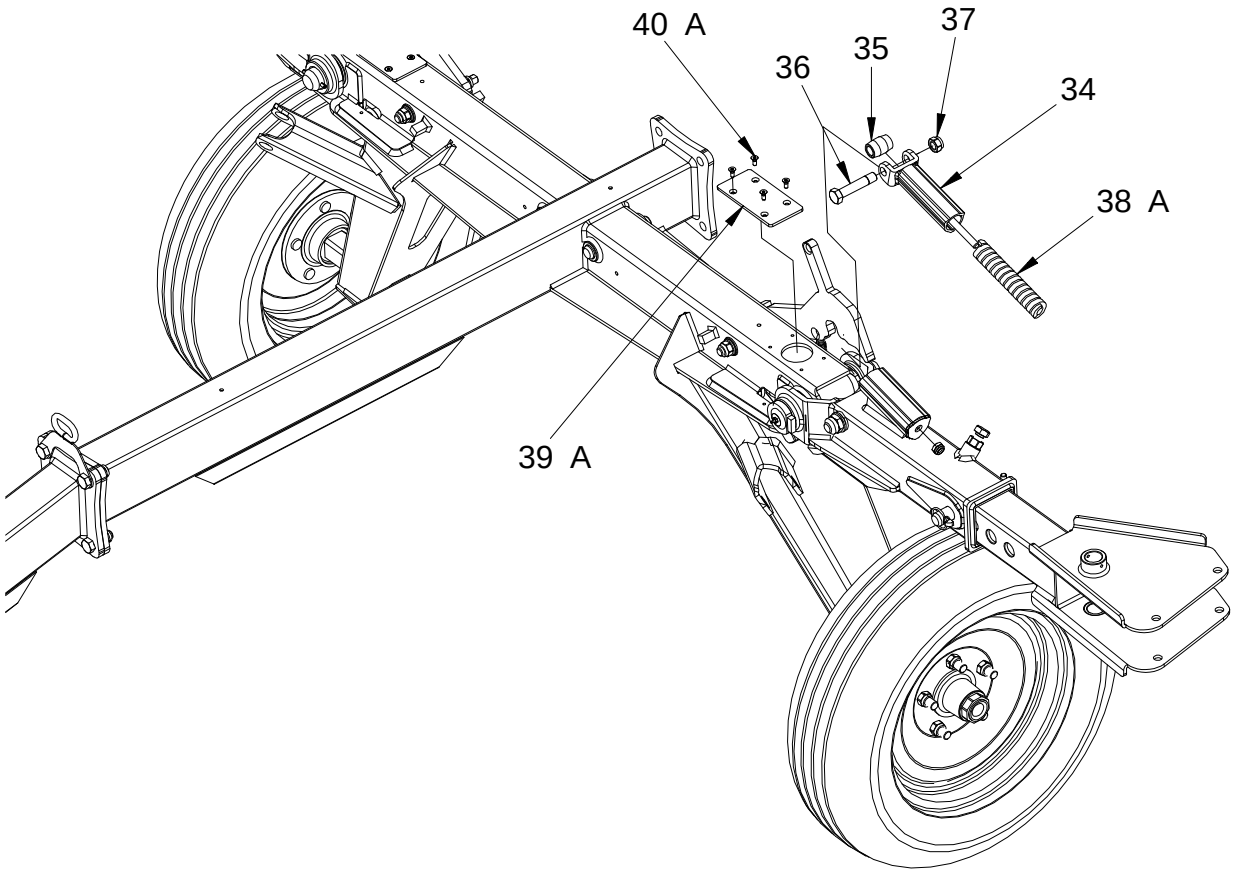

Assembly n°04

A) Fasten the spring on the frame with the spring coupling Pos. 31. Insert the spring Pos. 30 in the hook Pos. 29. Insert the locking hook Pos. 29 in the pin onto the frame Pos. 23 and fasten on the M16 self-locking nut Pos. 25 and the Ø 30x3 washer Pos. 24.

B) Insert the screw fastener Pos. 32 in the frame arm and fasten on the M16 counter-nut Pos. 33. Tighten on the screw at Pos. 32 as firmly as you like: very tight = a firmer frame, less tight = a more flexible arm-bearing frame.

C) Fasten the screw Pos. 32 to decrease the play between the tubes.

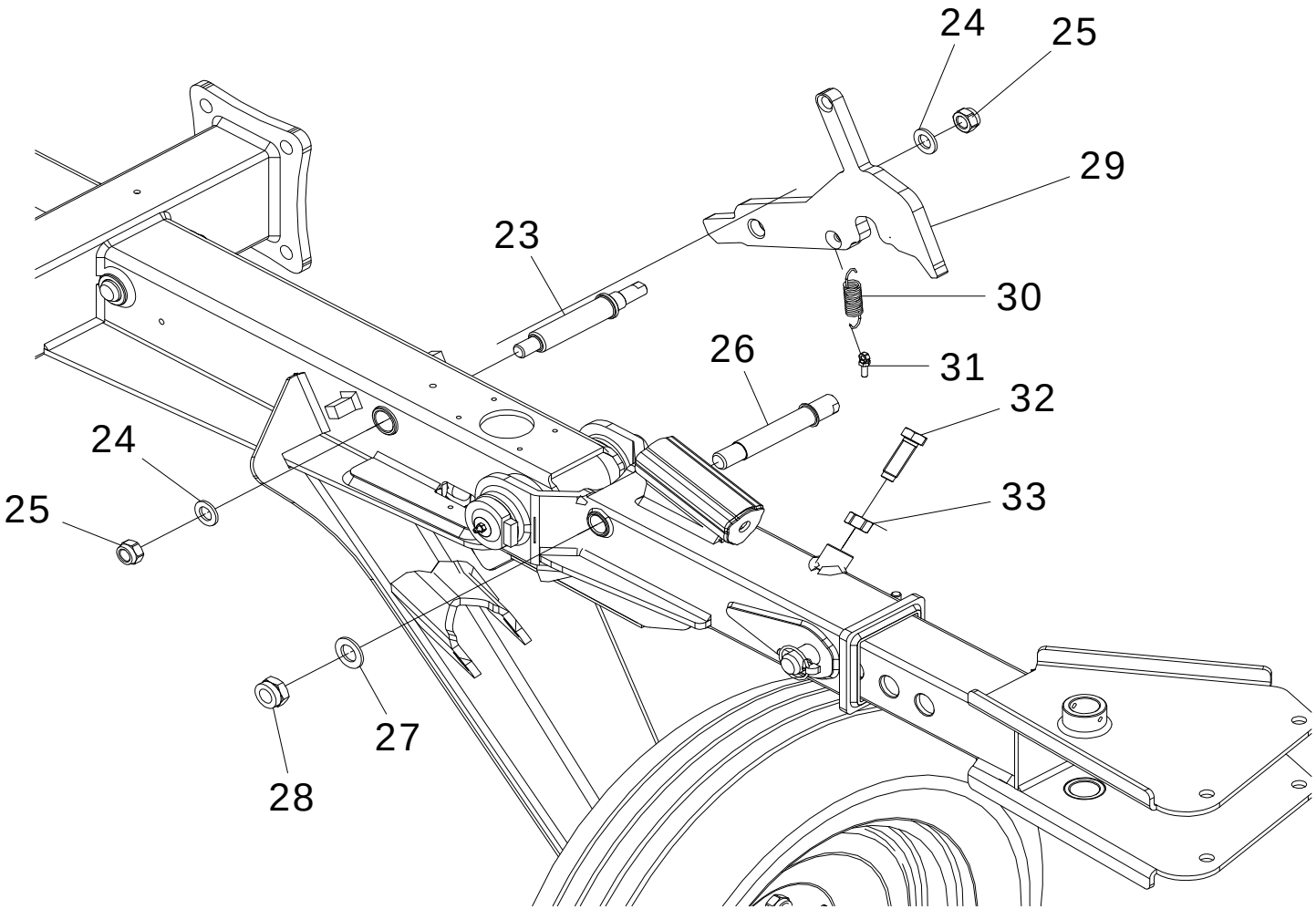

Assembly n°05A

Batrake 8-10-12 (double and single arm)

A) Mount cover pos.52 on frame and fasten with screws TE M8x30 pos.4 and washers M8 pos. 53. Put in between nylon spacers pos.51.
On central cover mount ring pos.55A using counter nut M8 pos. 56A and washer M8 pos.53.

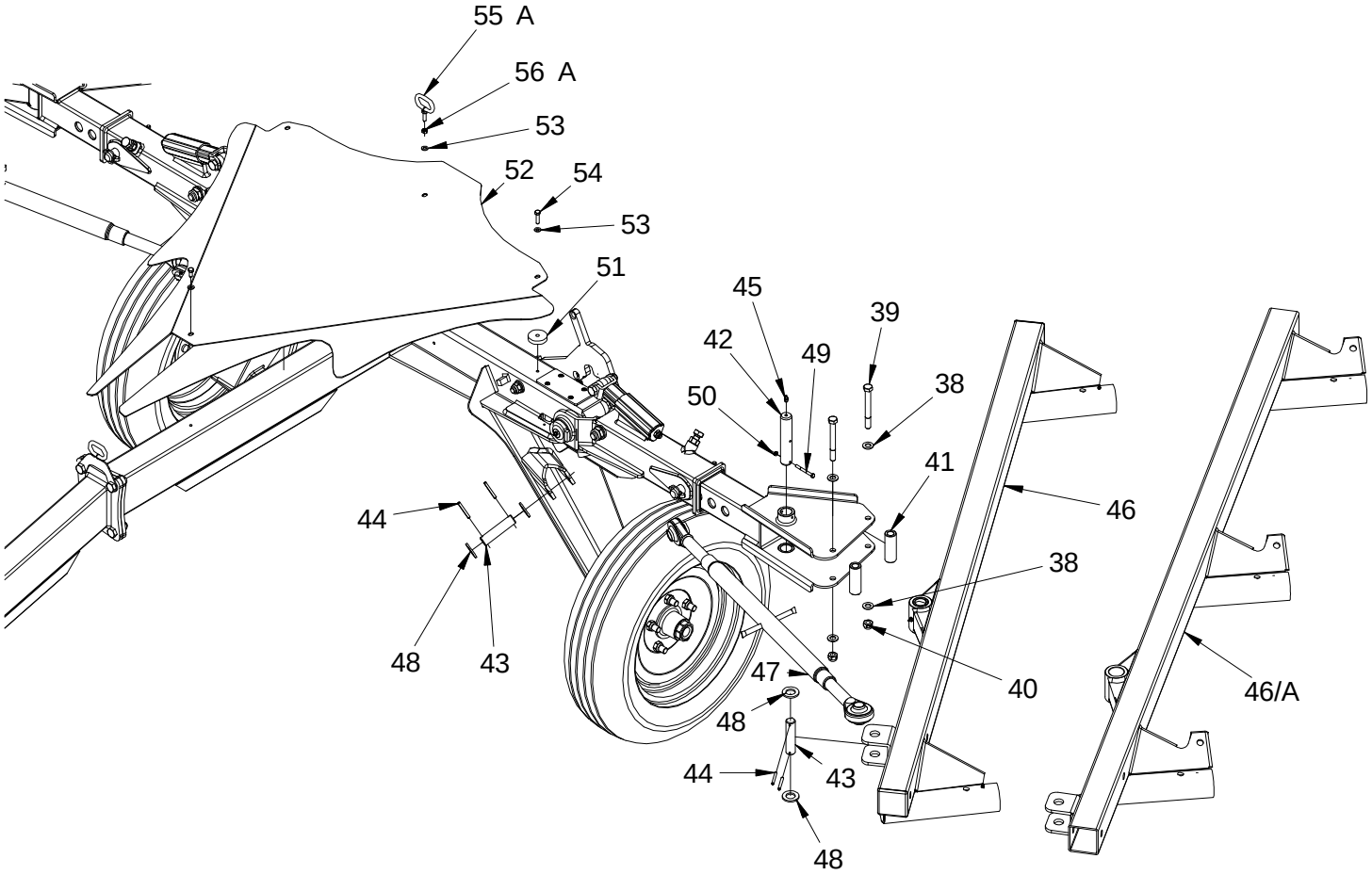

Assembly n°05

Batrake 8-10-12 (double and single arm)

A) Install the LH and RH raking wheel frame, Pos. 46 (double arm model), Pos. 46/A (single arm model). Fasten the frame with the Ø 30 L. 148 pin Pos. 42. Fasten the pin with the Ø 6x50 elastic pins Pos. 44. Install the M8x1 greaser in the pin Pos. 45. Install the two Ø 30x17.4 L.82 spacers Pos. 41 and fasten them on with the M14x120 T.E. screws Pos. 39, Ø15 washers Pos. 38 and M14 self-locking nuts Pos. 40.

B) Install the stabilizer Pos. 47 and fasten it on with the Ø6x50 elastic pin Pos. 44. Fasten the other side with Ø25 L.96 pin Pos. 43. Fasten the pin with Ø6x50 elastic pins Pos. 44.

Batrake 10-12 double arm, Batrake 8-10 single arm

A) Install the 70x70 L. 700 square-shaped frame joint Pos. 49. Fasten on with T.E. M16x100 Pos. 51, Ø16 washers Pos. 50 and M16 self-locking nuts Pos. 52.

B) Install the 80x80 square-shaped front frame Pos. 48. Fasten on with M16x100 T.E. screws Pos. 51, Ø16 washers Pos. 50 and M16 self-locking nuts Pos. 52.

Batrake 12 single arm

A) Install the 70x70 L. 700 square-shaped frame joint Pos. 49. Fasten on with M16x100 T.E. screws Pos. 51, Ø16 washers Pos. 50 and M16 self-locking nuts Pos. 52.

B) Install the 80x80 square-shaped front frame Pos. 48. Fasten on with M16x100 T.E. screws Pos. 51, Ø16 washers Pos. 50 and M16 self-locking nuts Pos. 52.

C) Install the 70x70 L. 700 square-shaped frame joint Pos. 49. Fasten on with M16x100 T.E. screws Pos. 51, Ø16 washers Pos. 50 and M16 self-locking nuts Pos. 52.

D) Install the 80x80 square-shaped frame Pos. 53. Fasten on with M16x100 T.E. screws Pos. 51, Ø16 washers Pos. 50 and M16 self-locking nuts Pos. 52.

Assembly n°05

Batrake 8-10-12 double and single arm

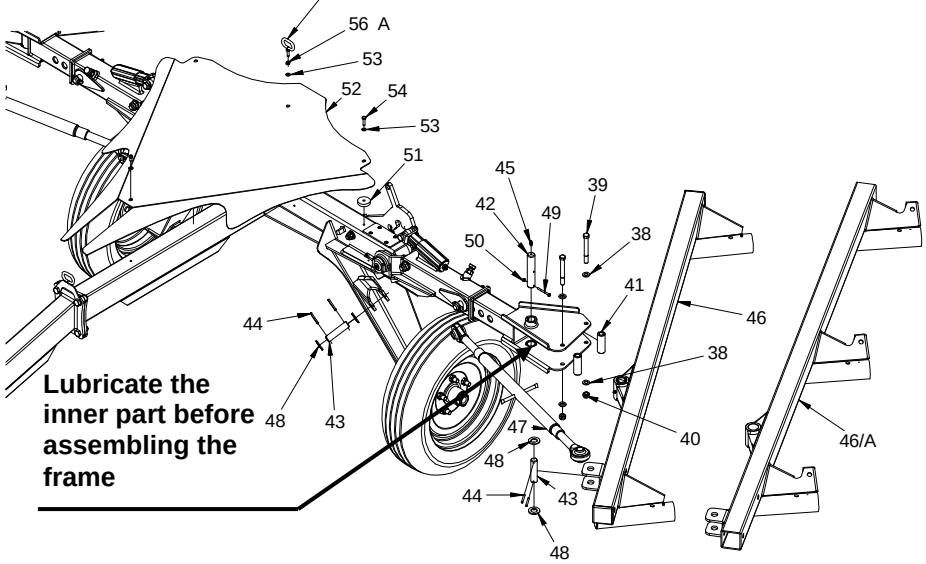

Batrake 12 double arm

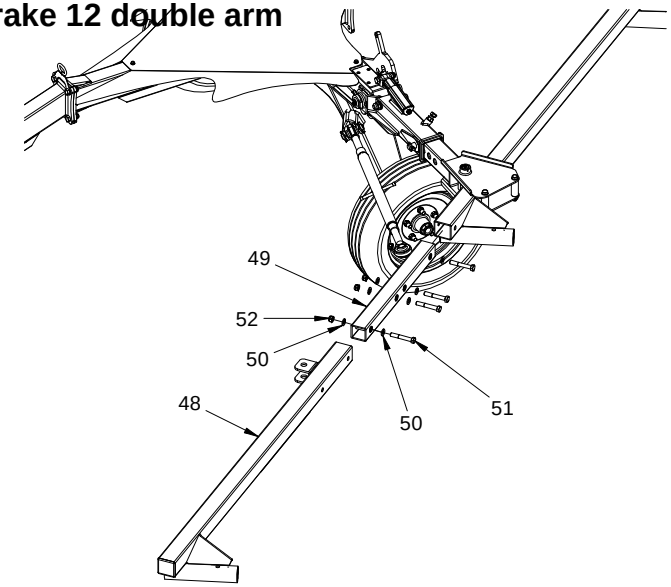

Batrake 10 double arm

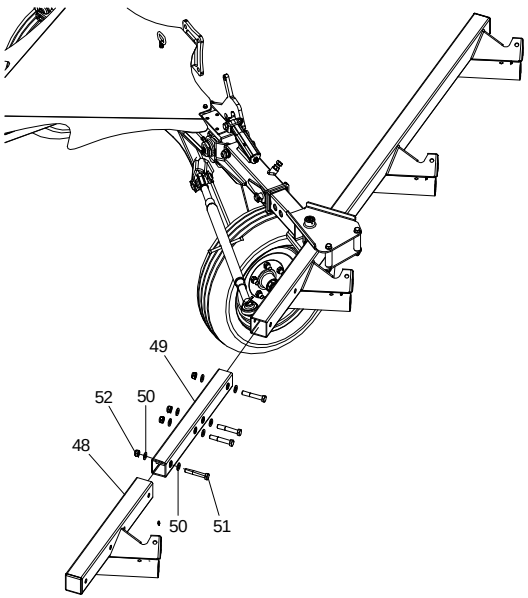

Assembly n°05

Batrake 8 single arm

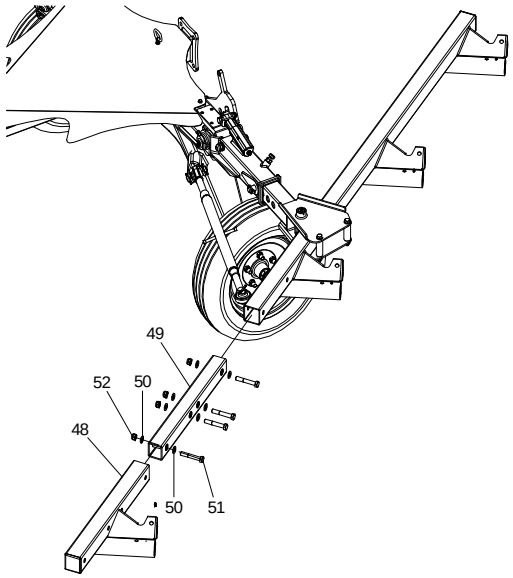

Batrake 10 single arm

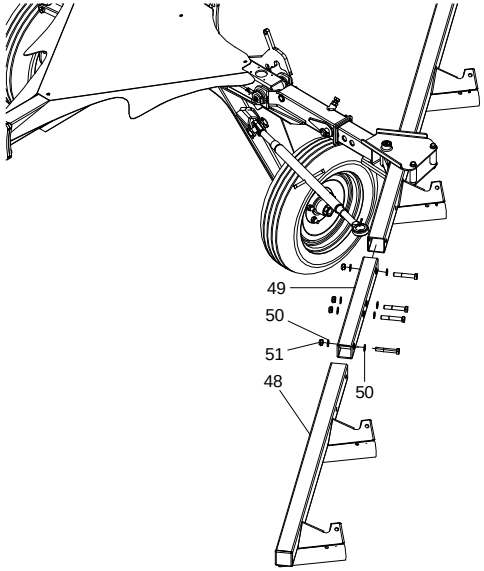

Batrake 12 single arm

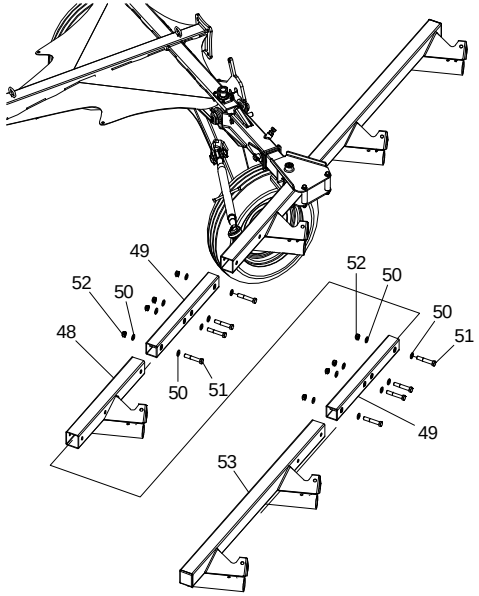

Assembly n°06

Batrake with double arm

A) Insert the double arm Pos. 54 in the arm bushing and fasten on with the Ø15 pin Pos. 55 and spring safety pin Pos. 56.
B) Install the M6x1 greaser Pos. 57.

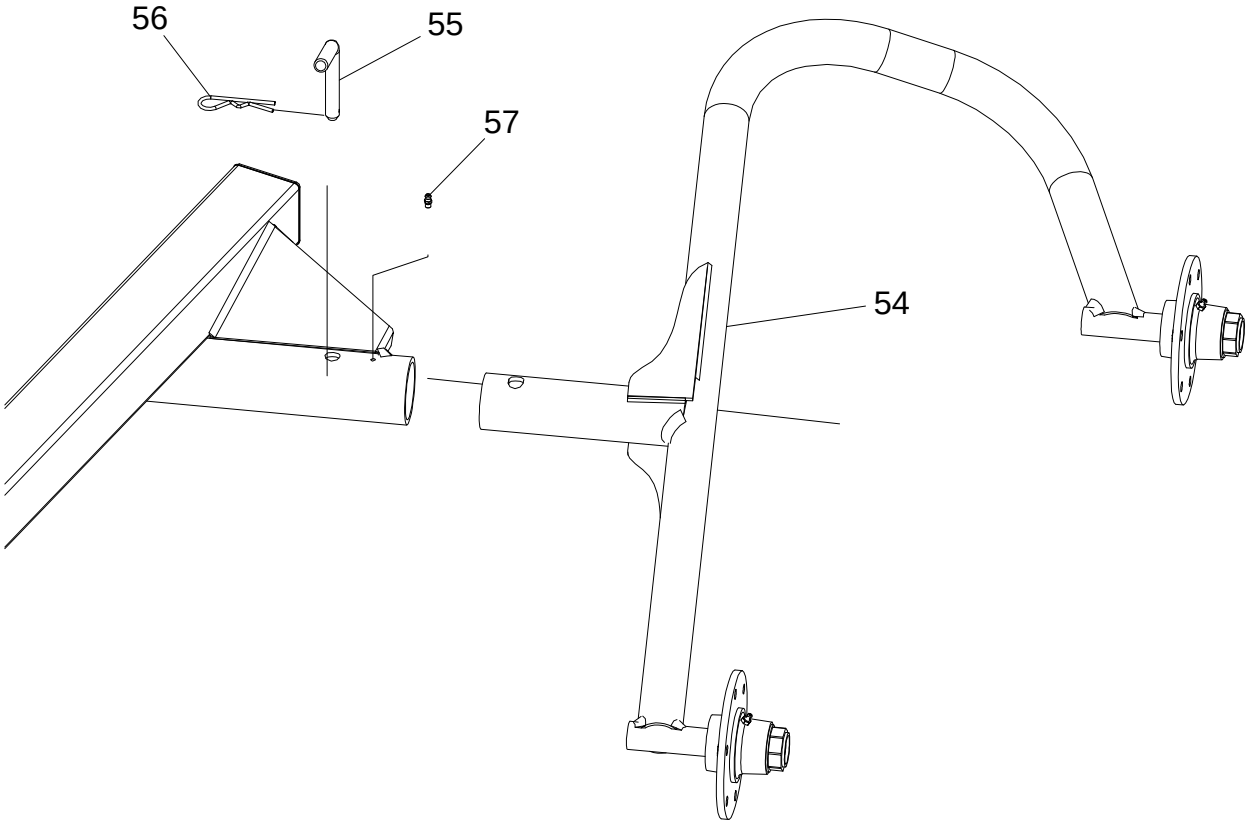

Assembly n°06.01

Batrake with single arm

A.01) Insert the spring clip Pos. 59 in the arm slot.
B.01) Insert the adjustment handle Pos. 58 in the Ø17 hole and screw it into the spring clip Pos. 59.
C.01) Fasten on the handle Pos. 58 with M16 nut and counter-nut Pos. 60.
E.01) Insert the torsion spring Pos. 61 in the arm Pos. 54.
F.01) Insert the arm Pos. 54 with pre-assembled spring in the arm bushing.
G.01) Place the end of the spring Pos. 61 on the clip Pos. 59.
H.01) Fasten on the arm with the Ø15 pin Pos. 55 and safety pin Pos. 56.
I.01) Install the M6x1 greaser Pos. 57.

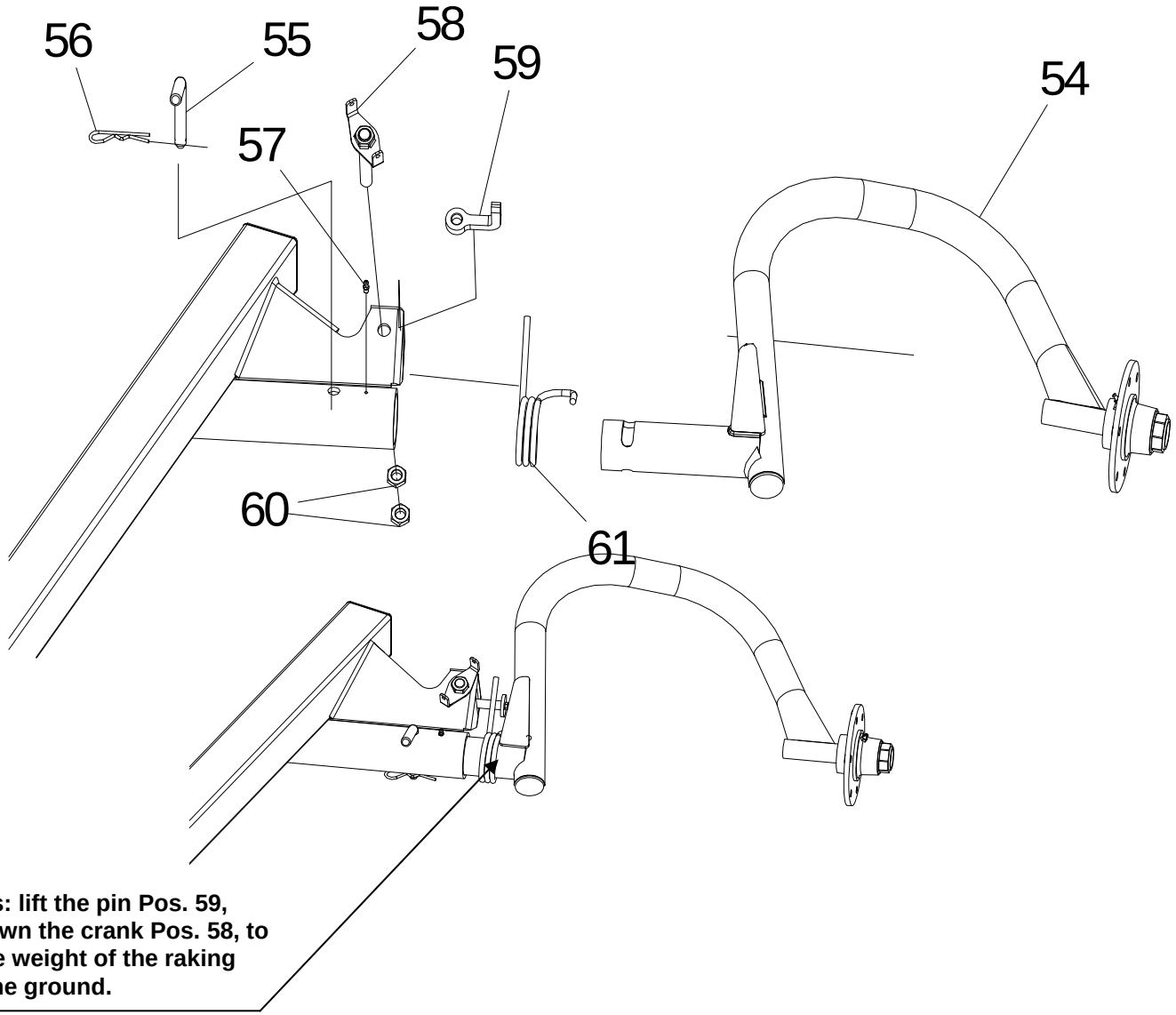

Assembly n°07

Batrake 8-10-12

A) Install the LH raking wheels Pos. 64 and fasten them onto the hub with M10x25 T.E. screws Pos. 66, M10 toothed washers Pos. 67 and M10 medium hexagonal nuts Pos. 68.

B) Install the RH raking wheels Pos. 65 following the instructions in step **A**

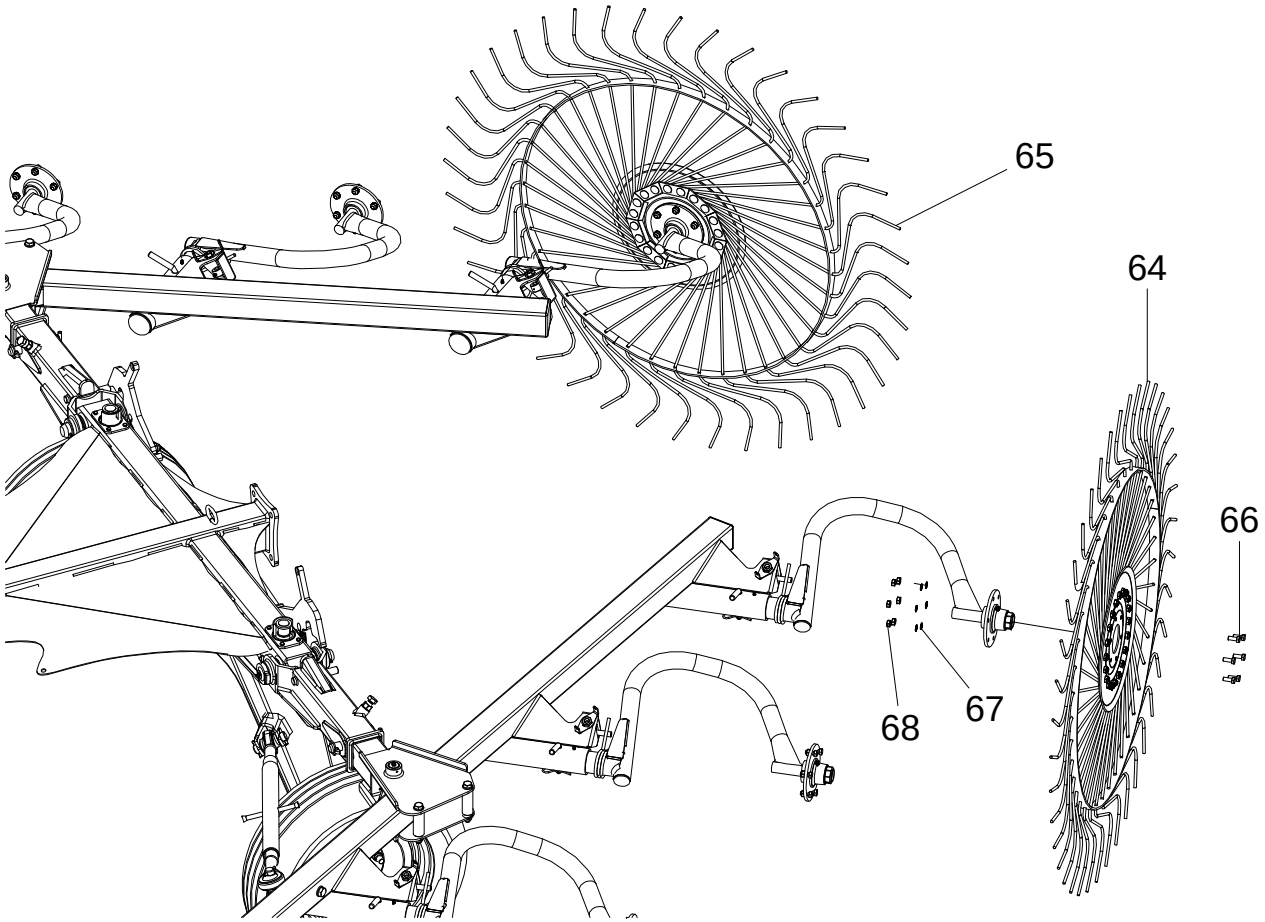

Assembly n°08

Batrake 8-10-12

A) Connect the two Ø1/4 L. 240 hydraulic pipes Pos. 74 to the two hydraulic cylinders Pos. 69.

Batrake 8

B) Connect the Ø1/4 L. 3.300 hydraulic pipe Pos. 73 to the two hydraulic pipes Pos. 74.

Batrake 10

C) Connect the Ø1/4 L. 3.800 hydraulic pipe Pos. 76, to the two hydraulic pipes Pos. 74.

Batrake 12

D) Connect the Ø1/4 L. 4.610 rubber hydraulic pipe Pos. 77, to the two hydraulic pipes Pos. 74.

Batrake 8-10-12

E) Install the hydraulic pipe support Pos. 75

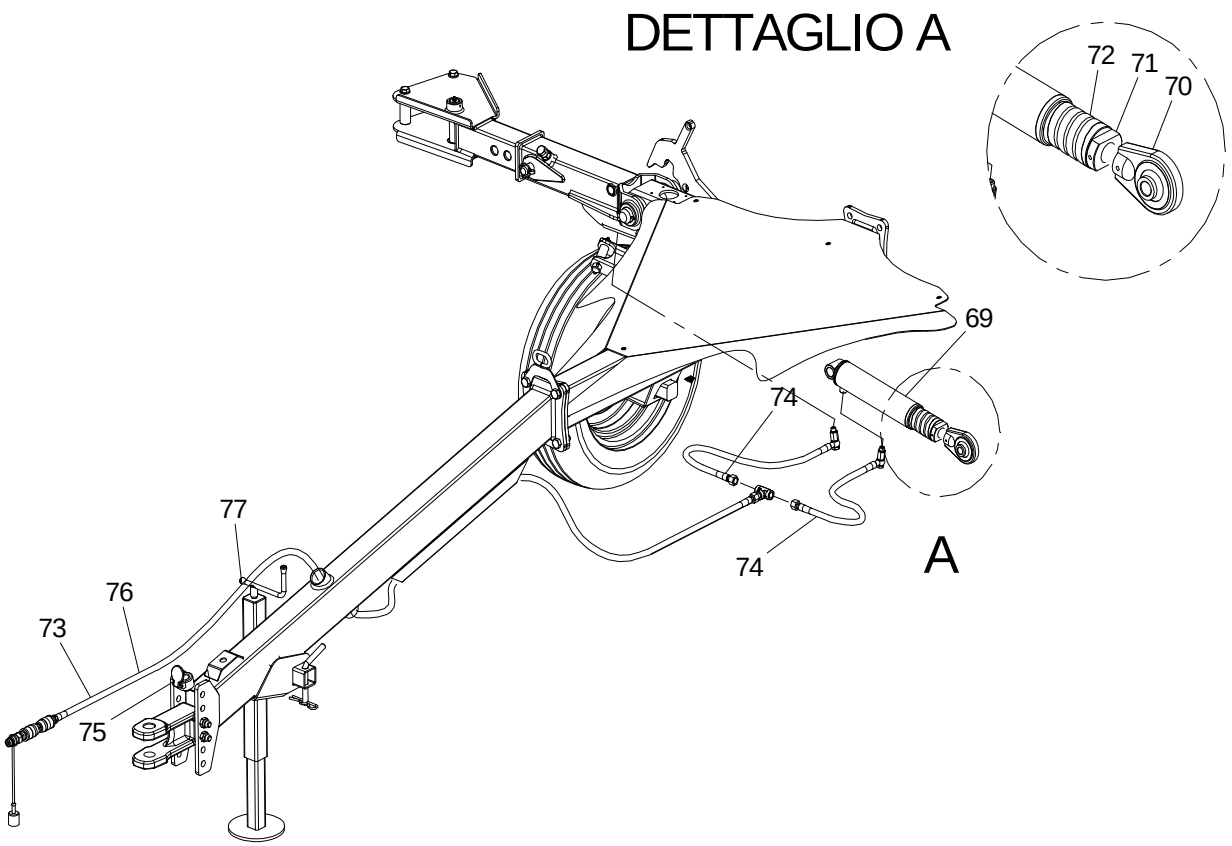

Important! Tighten the hydraulic pipes with care to avoid oil leaks.

Adjusting the hydraulic cylinder spring (part A)

Screw on the spring retainer Pos. 71 to decrease the weight of the LH and RH raking wheel frame on the ground.
To adjust correctly, screw on the spring retainer Pos. 71 by 2 mm at a time.

Assembly n°09

Batrake 8-10-12 Kicker Wheel (OPTIONAL)

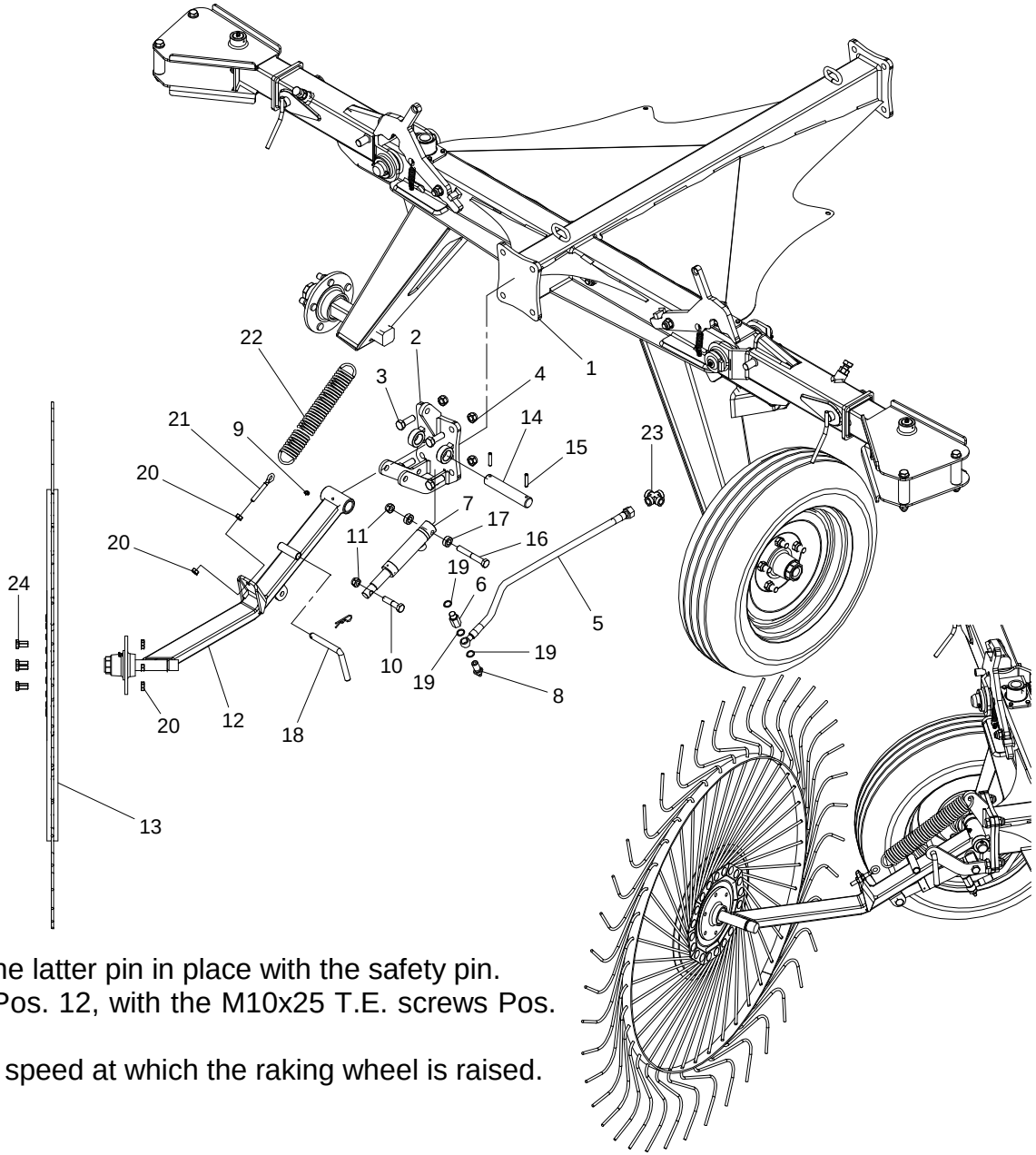

A) Fasten the kicker wheel support coupling Pos. 2 onto the main frame Pos. 1. Use M16x45 T.E. screws Pos. 3 and M16 self-locking nuts Pos. 4.
B) Install the kicker wheel arm Pos. 12 on the kicker wheel support coupling Pos. 2, inserting the arm coupling pin Pos. 14. Fasten on the pin with the two Ø8x40 elastic pins Pos. 15.
C) Fasten the back of the hydraulic cylinder (bulkhead) Pos. 7, onto the kicker wheel support coupling Pos. 2. Fasten on with M14x100 T.E. screw Pos.16, interposing the two 28x14.5x14 spacers Pos. 17. Lock in place with the M14 self-locking nut Pos. 11.
D) Fasten the front part of the hydraulic cylinder (stem) Pos. 7, onto the front of the kicker wheel arm Pos. 12. Fasten on with M14x60 T.E. screw Pos. 10 and M14 self-locking nut Pos. 11.
E) Fasten one end of the return spring Pos. 22 on the kicker wheel support coupling Pos. 2. Fasten the other end onto the kicker wheel Pos. 12, inserting the galvanized clamping ring Pos. 21 and two M10 nuts Pos. 20 with counter-nut function.
Adjust the weight of the kicker wheel on the ground by turning the nuts Pos. 20 either way.
F) When transporting the device on the road, fasten the kicker wheel arm Pos. 12 onto the kicker wheel support coupling Pos. 2 using the pin Pos. 18. Fasten the latter pin in place with the safety pin.
G) Fasten the wheel Pos. 13 onto the Kicker Wheel arm Pos. 12, with the M10x25 T.E. screws Pos. 24 and M10 hex nuts Pos. 20.
H) Tighten or loosen the throttle screw Pos. 8 to adjust the speed at which the raking wheel is raised.

Spare parts

When ordering spare parts please make photostats of this order form, fill out and mail or fax it directly to us at this address:

ENOAGRICOLA ROSSI srl - Calzolaro di Umbertide - Perugia - Italy

Tel. 075 / 930 22 22 Telefax 075 / 930 23 28

enorossi@enorossi.it - Info@enorossi.it

http://www.enorossi.it - www.enoagricolarossi.it - www.enoagricolarossi.com

To ensure prompt assistance and replacement of parts always supply below required information, thank you.

Company name	
Invoice address	
Country	
Destination of goods If different from above	

Pos.	Code number	Description	Quantity

Tavola 1 – PULL BAR / timone cod. 19010533

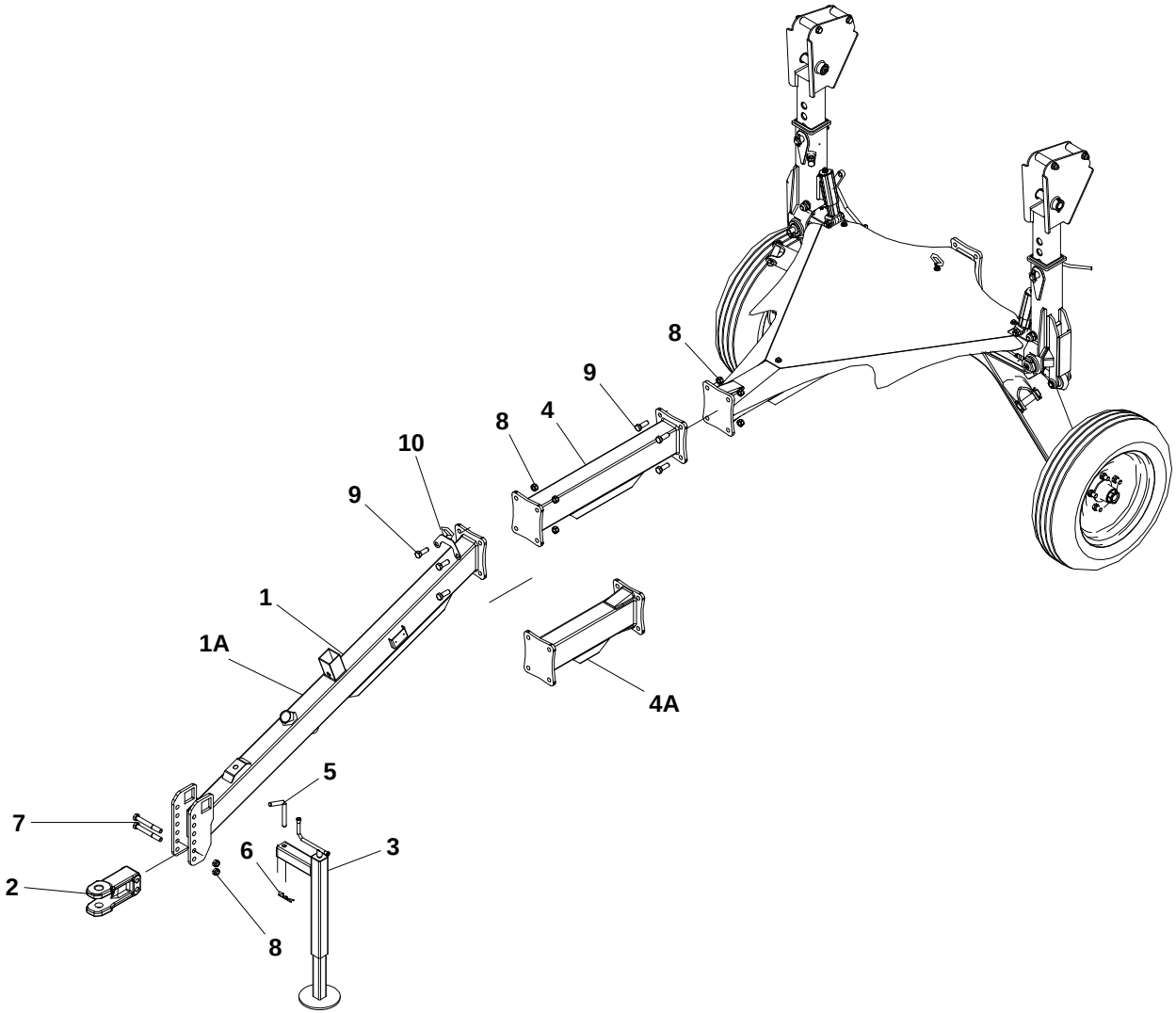

Tabella 1 – PULL BAR / timone cod. 19010533

POS.	CODICE	DESCRIZIONE	DESCRIPTION	MODEL
01	18032825	Telaio di traino	PULL BAR	BATRAKE 8
1/A	18032826	Telaio di traino	PULL BAR	BATRAKE 10-12
02	18032015	Attacco di traino	PULL LINKAGE ATTACHMENT	
03	18032039	Piede di appoggio	JACK	
04	18032381	Telaio prolunga L. 800	PULL BAR EXTENSION L.800	BATRAKE 12
4/A	18032175	Telaio prolunga L. 500	PULL BAR EXTENSION L.500	BATRAKE 10
05	12120104	Spina Ø15x198	PIN	
06	3040202	Coppiglia	SPLIT PIN	
07	3011295	Vite T.E. M16x130	SCREW TE M6X130	
08	3020204	Dado autoblocc. M16	SELF LOCKING NUT M 16	
09	3011645	Vite T.E. M16x45	SCREW TE M 16X45	
10	18032170	Passa corda	ROPE PASSES	
11				
12				
13				
14				
15				
16				
17				
18				
19				
20				
21				
22				
23				
24				
25				

Tavola 2 – RAKE WHEEL HUB / mozzo stella cod.

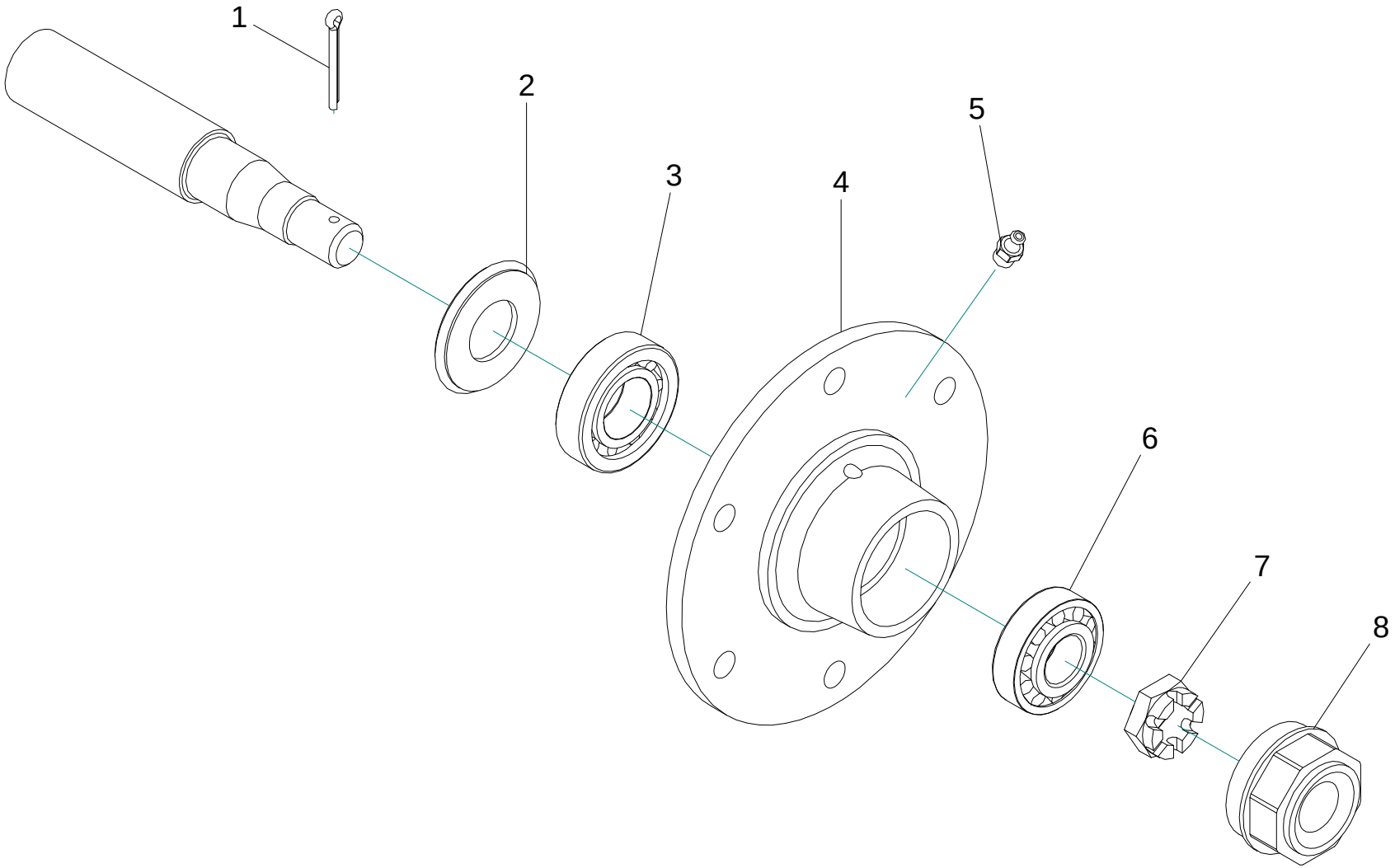

Tabella 2 – RAKE WHEEL HUB / mozzo stella cod.

POS.	CODICE	DESCRIZIONE	DESCRIPTION	MODEL
01	3040114	Copiglia	SPLIT PIN	
02	12860001	Anello di tenuta 25x54x2	DUST COVER 25X54X2	
03	12240119	Cuscinetto rulli conici 30205	BEARING 30205	
04	12150103	Mozzo	HUB	
05	3090101	Ingrassatore diritto M8x1	GREASE ZERK	
06	12240118	Cuscinetto rulli conici 30204	BEARING 30204	
07	3020210	Dado a intaglio M18x1.5	HEX NUT M18X1.5	
08	12360001	Parapolvere	DUST COVER CAP	
FOR TVZ BRAND HUBS PLEASE USE THE FOLLOWING PART NUMBERS				
1				
2		Anello di tenuta 40x80x1	DUST COVER 40X80X1	
3		Cuscinetto rulli conici 30208	BEARING 30208	
4				
5				
6		Cuscinetto rulli conici 30206	BEARING 30206	
7		Dado esagonale M27x1.5	HEX NUT M27X1.5	
8		Parapolvere stampato D.62	DUST COVER CAP	

Tavola 2A – WHEEL HUB / mozzo ruota cod.

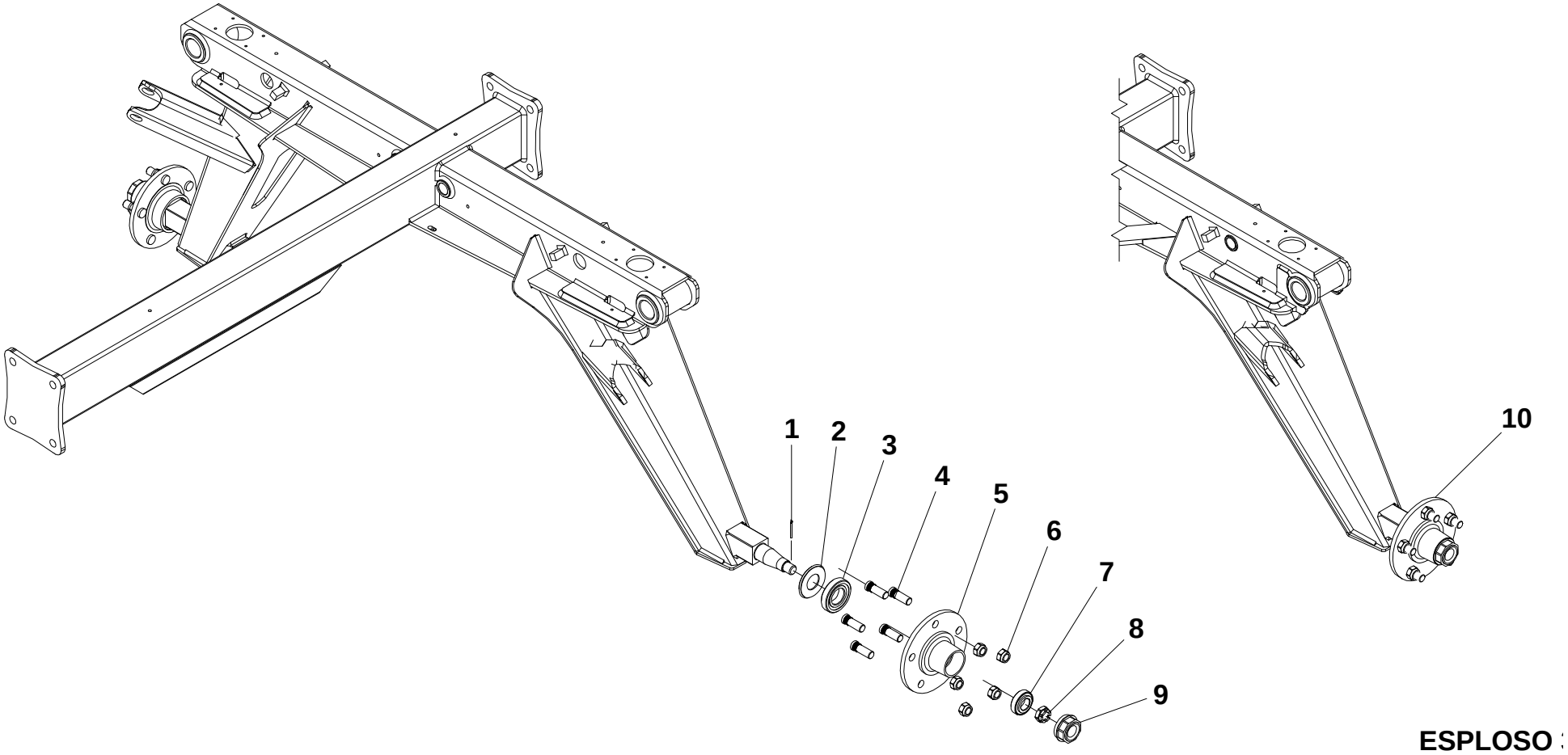

Tabella 2A – WHEEL HUB / mozzo ruota cod.

POS.	CODICE	DESCRIZIONE	DESCRIPTION	MODEL
01	3040114	Copiglia	SPLIT PIN	
02	12360002	Anello di tenuta 37x72x1,5	DUST COVER 37x72x1,5	
03	12240143	Cuscinetto rulli conici 30207	BEARING 30207	
04	3011609	Colonnetta Mozzo	HUB	
05	12150108	Mozzo	HUB	
06	3020218	Dado mozzo 16 MB	STUD BOLT 16 MB	
07	12240119	Cuscinetto rulli conici 30205	BEARING 30205	
08	3020217	Dado ad intaglio M20x1.5	HEX NUT M20X1.5	
09	12360003	Parapolvere	DUST COVER CAP	
10	2050111	Mozzo completo	COMPLETE HUB	
FOR TVZ BRAND HUBS PLEASE USE THE FOLLOWING PART NUMBERS				
01				
02	10011343	Anello di tenuta 48x80x1	DUST COVER 48x80x1	
03	12240244	Cuscinetto rulli conici 30208	BEARING 30208	
04				
05	12150116	Mozzo	HUB	
06				
07	12240144	Cuscinetto rulli conici 30206	BEARING 30206	
08	3020260	Dado ad intaglio M27x1.5	HEX NUT M27X1.5	
09	12360004	Parapolvere D. 62	DUST COVER CAP D. 62	
10	2050111	Mozzo completo	COMPLETE HUB	

Tavola 3 – RAKE WHEEL / stella andanatrice cod.

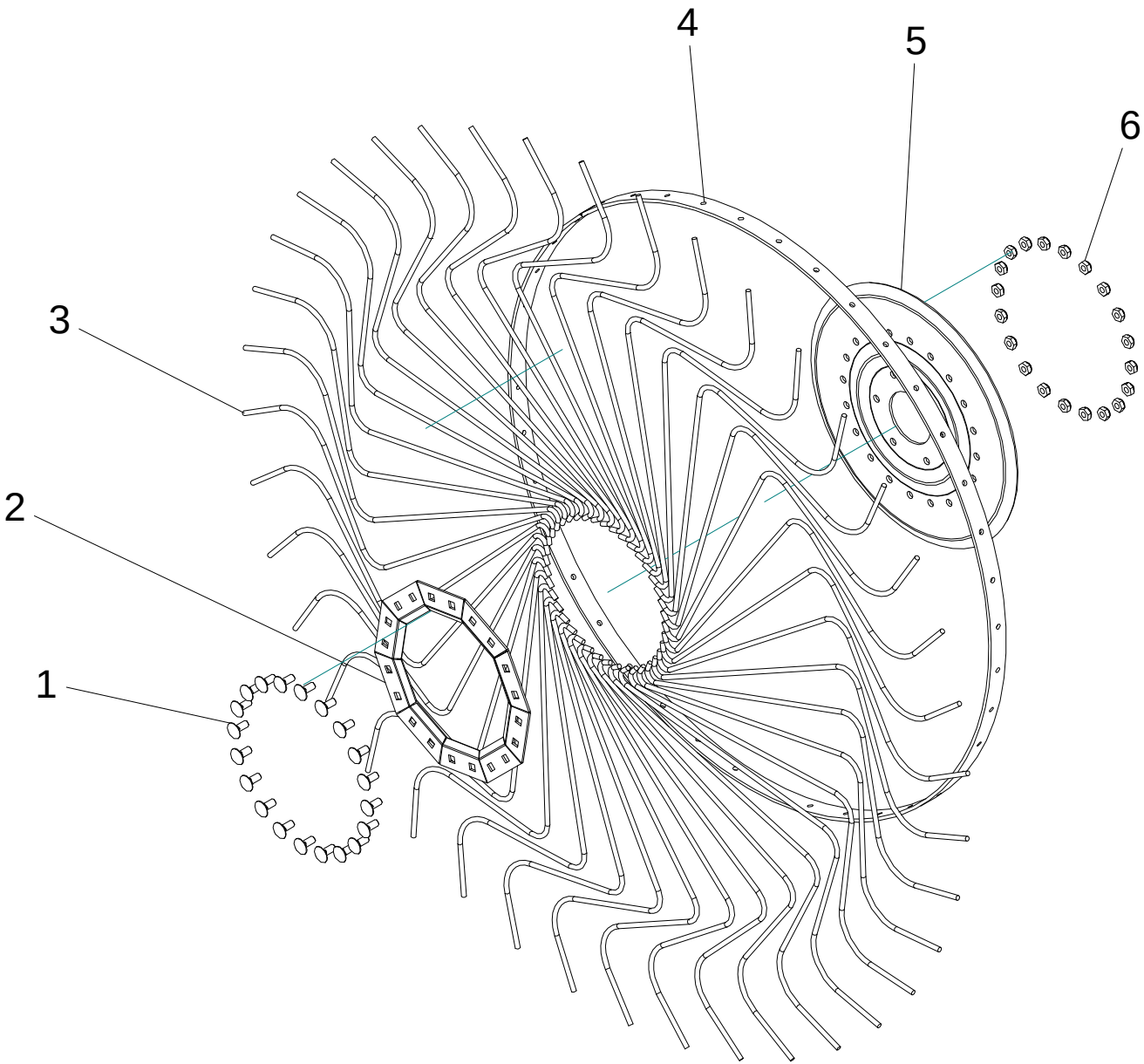

Tabella 3 – RAKE WHEEL / stella andanatrice cod.

POS.	CODICE	DESCRIZIONE	DESCRIPTION	MODEL
01	3010105	Vite TTQST M10x25	SCREW TTQST M10X25	
02	18030416	Placchetta	PLATE	
03	18030415	Dente stellare “VICON”	VICON TOOTH 6.9	
04	18031113	Anello per stella	EXTERNAL RING	
05	12160101	Flangia per ruota stellare	CENTRAL FLANGE	
06	3020224	Dado esagonale conelox M10	HEX NUT M10	
07				
08				
09				
10				
11				
12				
13				
14				
15				
16				
17				
18				
19				
20				
21				
22				
23				
24				
25				

Tavola 4 – MAIN BODY / corpo centrale cod. 19010534

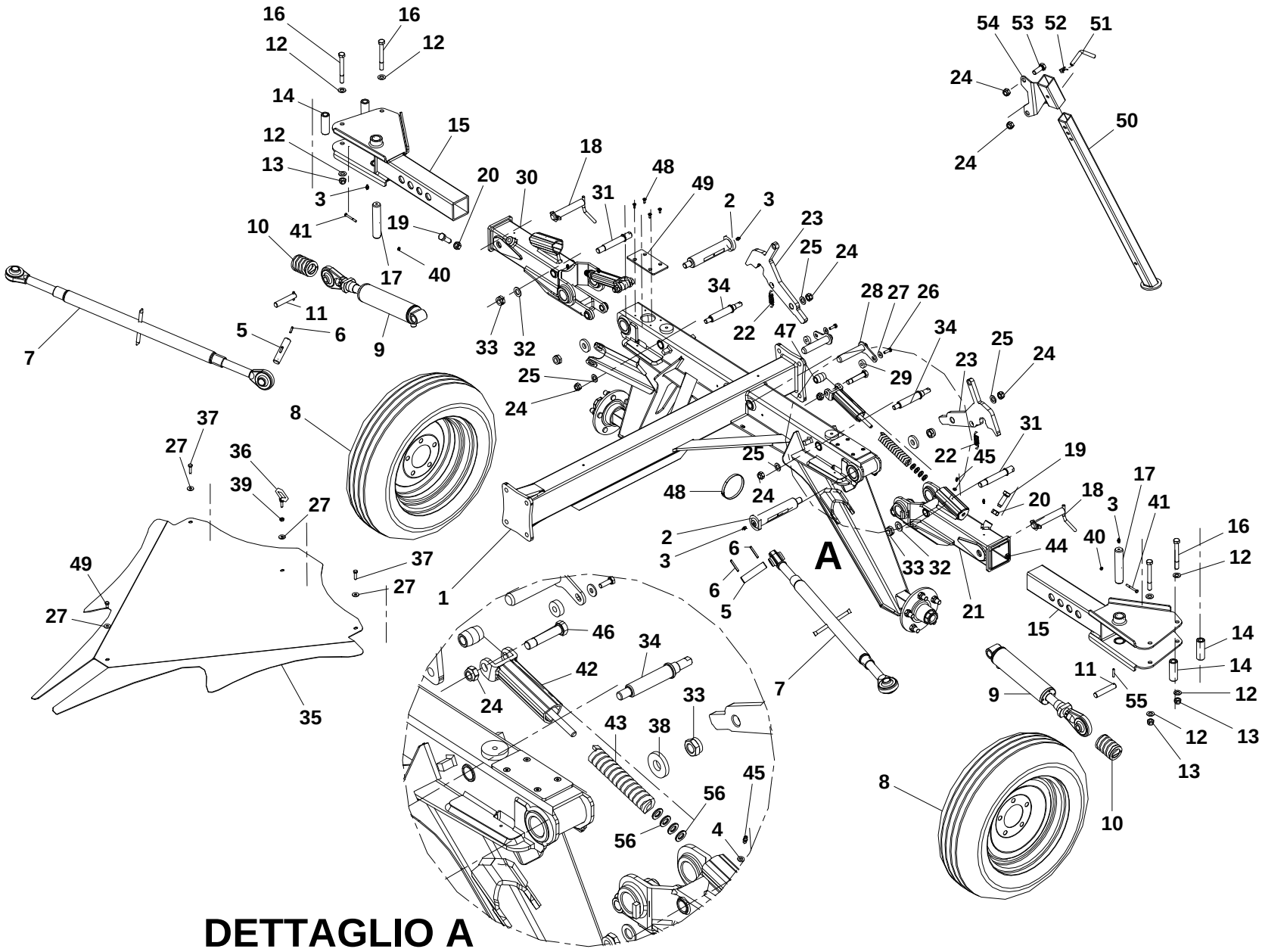

Tabella 4 – MAIN BODY / corpo centrale cod. 19010534

POS.	CODICE	DESCRIZIONE	DESCRIPTION	MODEL
01	18032710	Telaio carrello B-Rake	CART	
02	18032389	Perno snodo orizzontale	PIN	
03	3090101	Ingrassatore diritto M8x1	GREASE ZERK	
04	3030158	Rondella Ø6	WASHER Ø6	
05	18032177	Perno di collegamento	PIN	
06	3080113	Spina elastica Ø6x50	SPRING PIN 6X50	
07	12310707	Manicotto per tre punti	TIE ROD	
08	12170108	Ruota	TIRE	
09	18032151	Cilindro idraulico	HYDRAULIC CYLINDER	
9A	18032358	Cilindro idraulico completo	COMPLETE HYDRAULIC CYLINDER	
10	11010633	Molla	SPRING	
11	18032178	Perno alzata telai	PIN	
12	3030161	Rondella Ø14	WASHER 14	
13	3020203	Dado autoblocc. M14	SELF LOCKING NUT M14	
14	18032150	Distanziale	SPACER	
15	18032179	Braccio porta telaio interno	FRAME HOLDER	
16	3011311	Vite T.E. M14x120	SCREW T.E. M14X120	
17	18032735	Perno	PIN	
18	12310312	Perno con maniglia e coppiglia a scatto	PIN	
19	18032181	Vite di fissaggio M16x50	SCREW M16X50	
20	3020312	Dado esagonale M16	HEX NUT M16	
21	18032376	Braccio porta telaio esterno SX	FRAME HOLDER	
22	11010535	Molla a trazione	SPRING	
23	18032154	Gancio di bloccaggio	HOOK	
23A		Gancio di bloccaggio Mod. Italia	HOOK MODEL. ITALY	
24	3020204	Dado autoblocc. M16	SELF LOCKING NUT M16	
25	3030175	Rondella Ø16	WASHER 16	
26	3011242	Vite T.E. M8x25	SCREW TE M8x25	

Tabella 4 – MAIN BODY / corpo centrale cod. 19010534

POS.	CODICE	DESCRIZIONE	DESCRIPTION	MODEL
27	3030157	Rondella M8x25	WASHER M 8X25	
28	18032183	Spinotto martinetto	CYLINDER PIN	
29	18032156	Rondella fissaggio perni	WASHER	
30	18032377	Braccio porta telaio esterno DX	FRAME HOLDER	
31	18032697	Perno di sicurezza	SAFETY PIN	
32	3030168	Rondella M 20	WASHER M20	
33	3020216	Dado autobloccante M 20	SELF LOCKING NUT M 20	
34	18032696	Perno leva sgancio	PIN	
35	18031699	Mantello	MANTLE	
36	18032617	Passacavi	PASSAGE FOR CABLE	
37	3010780	Vite TE M 8x30	SCREW TE M8X30	
38	18032388	Rondella Ø50	WASHER Ø50	
39	3020329	Dado M 8	NUT M8	
40	3020213	Dado autoblocc. M6	SELF LOCKING NUT M6	
41	3010760	Vite TE M 6x55	SCREW TE M 6X55	
42	18032378	Albero scorrevole	SLIDING SHAFT	
43	11010633	Molla a carico	SPRING	
44	3020202	Dado autobloccante M12	SELF LOCKING NUT M12	
45	3090102	Ingrassatore M6	GREASER M6	
46	18032374	Perno rotolamento rullo	*ROLLING PIN*	
47	18032373	Rullo	ROLL	
48	3010802	Vite TPSEI M6x16	SCREW TPSEI M6X16	
49	18032372	Lamiera di scorrimento	SHEET METAL SCROLL	
50	18032663	Piedino di sicurezza (solo per BATRAKE 8)	JACK (only BATRAKE 8)	
51	12120503	Spina D. 12 L.125	Pin Ø12 L.125	
52	3040201	Coppiglia Ø3x60	Spllit pin Ø3x60	
53	3011645	Vite TE M16x45	Screw TE M16x45	
54	18032662	Guida per piedino di sicurezza	Guide	
55	3080102	Spina elastica 6x36	SPRING PIN 6X36	
56	3030162	Rondella Ø12	WASHER Ø12	

Tavola 5 – LATERAL FRAME / telaio laterale cod. 19010539

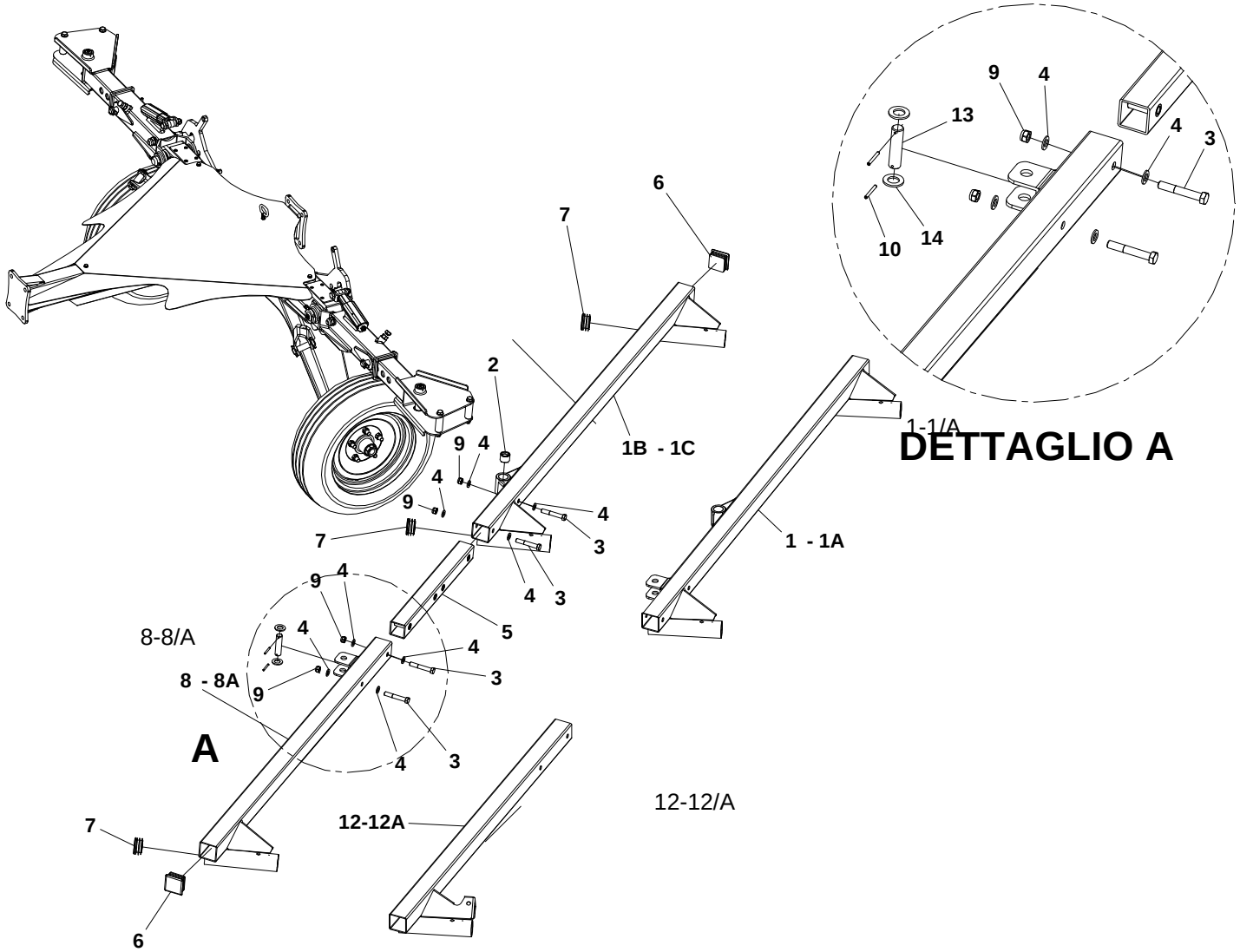

Tabella 5 – LATERAL FRAME / telaio laterale cod. 19010539

POS.	CODICE	DESCRIZIONE	DESCRIPTION	MODEL
01	18032733	Telaio porta stelle SX	LATERAL FRAME SX	BATRAKE 8-10
01/A	18032734	Telaio porta stelle DX	LATERAL FRAME DX	BATRAKE 8-10
01/B	18032740	Telaio porta stelle SX	LATERAL FRAME SX	BATRAKE 12
01/C	18032741	Telaio porta stelle DX	LATERAL FRAME DX	BATRAKE 12
02	12071209	Boccola cement. Biella centrale	BUSHING	
03	301658	Vite T.E. M16x100	SCREW TE M16X100	
04	3030175	Rondella Di. 17 mm	WASHER 17MM.	
05	18032189	Giunzione	JUNCTION	
06	18032661	Puntale quadro alettato	SQUARE RUBBER CAP	
07	18032661	Puntale alettato rotondo	ROUND RUBBER CAP	
08	18032742	Telaio porta stelle ant. SX	FRAME	BATRAKE 12
8/A	18032743	Telaio porta stelle ant. DX	FRAME	BATRAKE 12
09	3020204	Dado autoblocc. M16	SELF LOCKING NUT M16	
10	3080113	Spina elastica 6x50	SPRING PIN	
11	3090101	Ingrassatore diritto M8x1	GREASE ZERK	
12	18032603	Telaio porta stelle anteriore SX	LEFT FRAME	BATRAKE 10
12/A	18032604	Telaio porta stelle anteriore DX	RIGHT FRAME	BATRAKE 10
13	18032177	Perno Ø25 L.100	*PIN* Ø25 L.100	
14	3030174	Rondella Ø 24	*WASHER Ø 24*	

Tavola 6 – HYDRAULIC CYLINDER / cilindro alzata telaio cod. 19010535

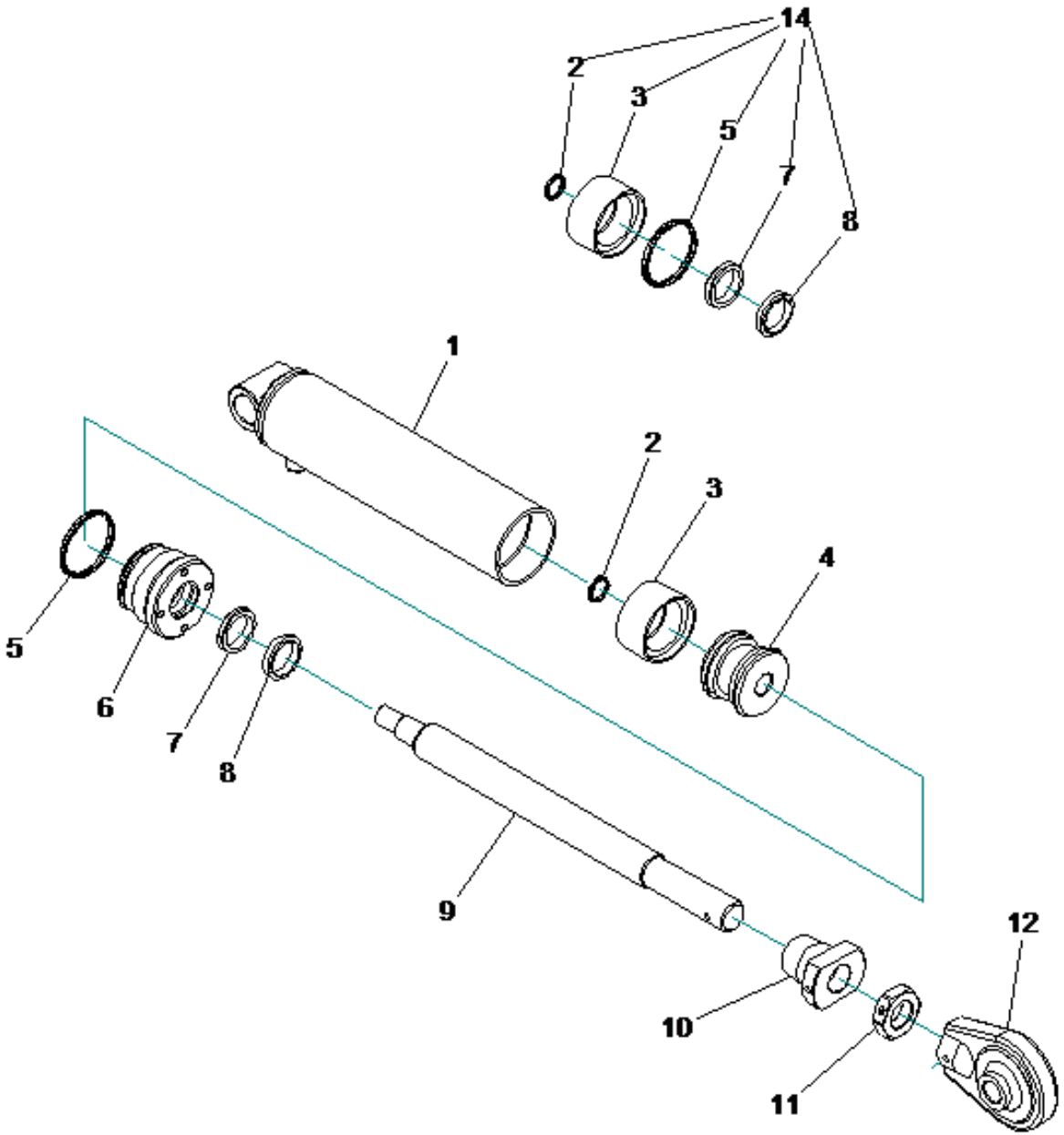

Tabella 6 – HYDRAULIC CYLINDER / cilindro alzata telaio cod. 19010535

POS.	CODICE	DESCRIZIONE	DESCRIPTION	MODEL
01	18032185	Cilindro	CYLINDER LYNER	
02		Anello toroidale OR	TOROIDAL RING	
03		Balmaster	BALMASTER	
04	12770216	Pistone	PISTON	
05		Anello toroidale OR	TOROIDAL RING	
06	12420104	Testata di guida	HEAD	
07	10010643	Balsele	BALSELE	
08	10010620	Raschiatore	SCRAPER	
09	18032186	Stelo	SHAFT	
10	18032152	Boccola pre-carico molla	BUSHING	
11	18032153	Dado esagonale forato M 27x2	DRILLED HEX NUT M27X2	
12	18032187	Supporto	SUPPORT	
13				
14	18032356	Kit guarnizioni	SEAL KIT	

Tavola 7 – FRAME ARMS CARRIER INDEPENDENT ARM VERSION / telaio porta bracci indipendenti cod. 19010536

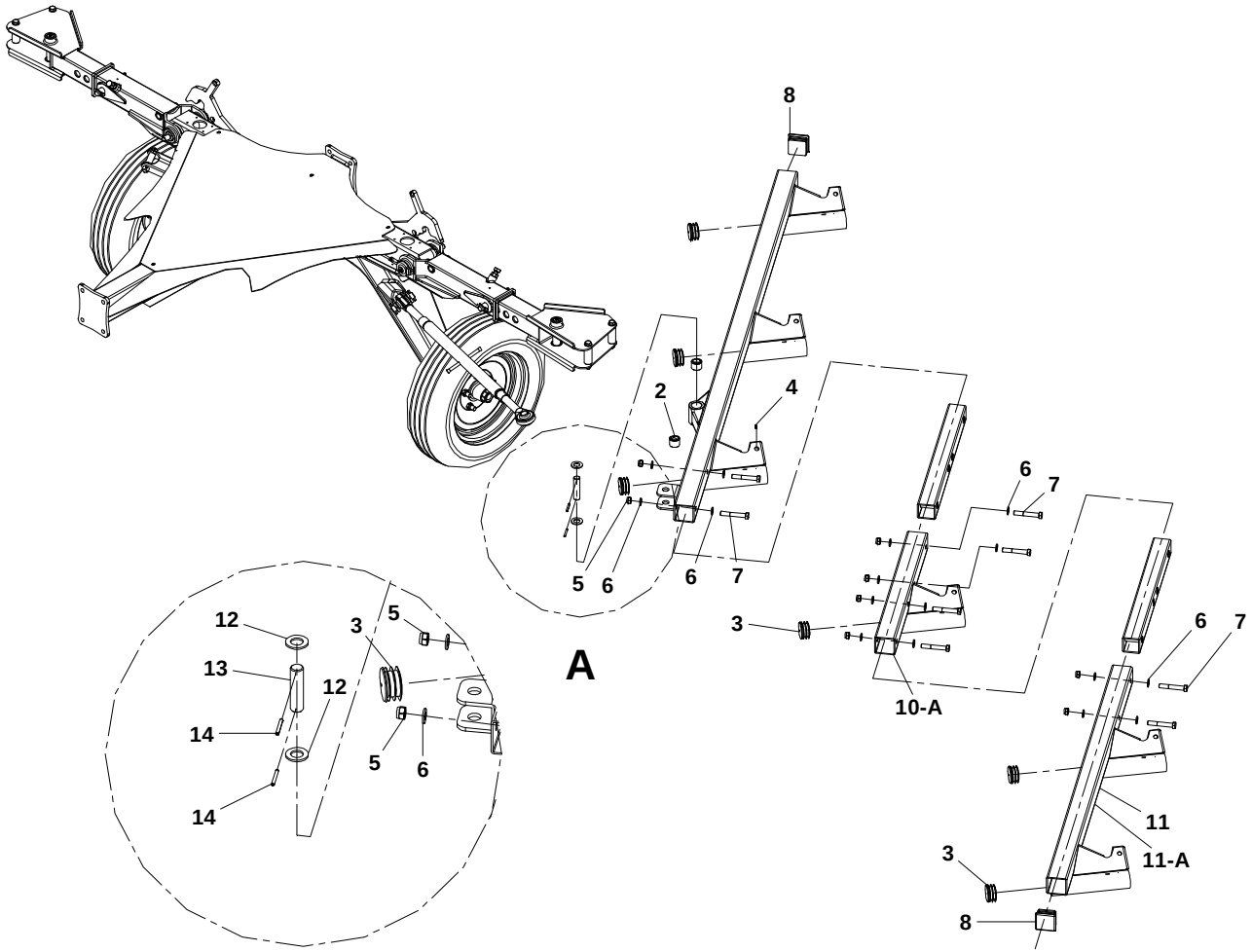

ESPLOSO 7 TAV.RICAMBI

DETTAGLIO A

Tabella 7 – FRAME ARMS CARRIER INDEPENDENT ARM VERSION / telaio porta bracci indipendenti cod. 19010536

POS.	CODICE	DESCRIZIONE	DESCRIPTION	MODEL
01	18032731	Telaio porta stelle bracci indip. SX	LEFT FRAME	
01A	18032732	Telaio porta stelle bracci indip. DX	RIGHT FRAME	
02	12071209	Boccola cementata biella centrale	BUSHING	
03	18032661	Puntale alettato	ROUND RUBBER CAP	
04	3090101	Ingrassatore diritto M8x1	GREASE ZERK	
05	3020204	Dado autoblocc. M16	SELF LOCKING NUT	
06	3030175	Rondella Ø16	WASHER M16	
07	3011658	Vite T.E. M16x100	SCREW TE M16X100	
08	9190008	Puntale quadro alettato	SQUARE RUBBER CAP	
09	18032189	Giunzione	JUNCTION	
10	18032190	Telaio porta stelle anteriore bracci ind. SX	LEFT FRAME	
10/A	18032193	Telaio porta stelle anteriore bracci ind. DX	RIGHT FRAME	
11	18032191	Telaio porta stelle anteriore bracci ind. SX	LEFT FRAME	
11/A	18032194	Telaio porta stelle anteriore bracci ind. DX	RIGHT FRAME	
12	3030174	Rondella Ø24	WASHER Ø 24	
13	18032177	Perno di collegamento Ø25x100	PIN Ø25x100	
14	3080113	Spina elastica Ø6x50	SPRING PIN Ø6x50	

Tavola 8 – INDEPENDENT ARM,HUB AND RAKE WHEEL / telaio braccetto singolo/mozzo/stella cod. 19010537

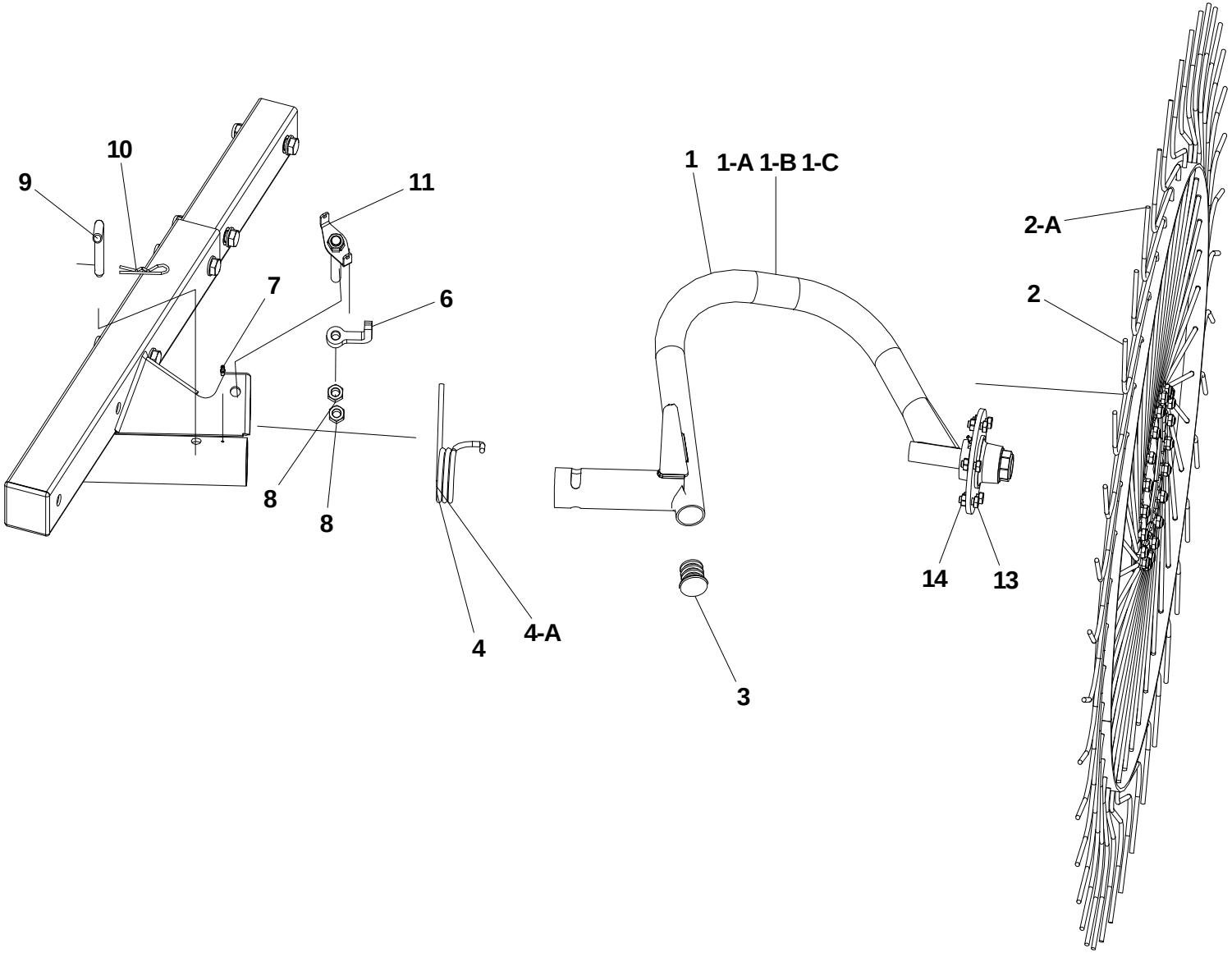

Tabella 8 – INDEPENDENT ARM,HUB AND RAKE WHEEL / telaio braccetto singolo/mozzo/stella cod. 19010537

POS.	CODICE	DESCRIZIONE	DESCRIPTION	MODEL
01	18032786	Braccetto porta stelle indip. SX	LEFT ARM	BR 8/10/12 IND.
01/A	18032785	Braccetto porta stelle indip. DX	RIGHT ARM	BR 8/10/12 IND.
01/B	18032790	Braccetto porta stelle indip. SX	LEFT ARM	BR 10 DOPPIO
01/C	18032789	Braccetto porta stelle indip. DX	RIGHT ARM	BR 10 DOPPIO
02	17010812	Ruota stellare “VICON” SX	VICON RAKE WHEEL SX	
02/A	17010803	Ruota stellare “VICON” DX	VICON RAKE WHEEL DX	
03	9190009	Puntale alettato	CAP	
04	18032605	Molla braccetto SX	ARM SPRING SX	
04/A	18032606	Molla braccetto DX	ARM SPRING DX	
05				
06	18032091	Fermo per molla	PIN	
07				
08	3020313	Dado M16	NUT M16	
09	12120107	Spina Ø15x180	PIN 15X180	
10	3040201	Coppiglia	SPLIT PIN	
11	18032098	Manovella di regolazione	HANDLE	
12				
13	3011211	Vite T.E. M10x25	SCREW TE M10X25	
14	3020328	Dado M10	NUT M10	

Tavola 9 – DOUBLE ARM VERSION, HUB AND RAKE WHEEL / Stelaio braccetto doppio / mozzo / stella cod. 19010540

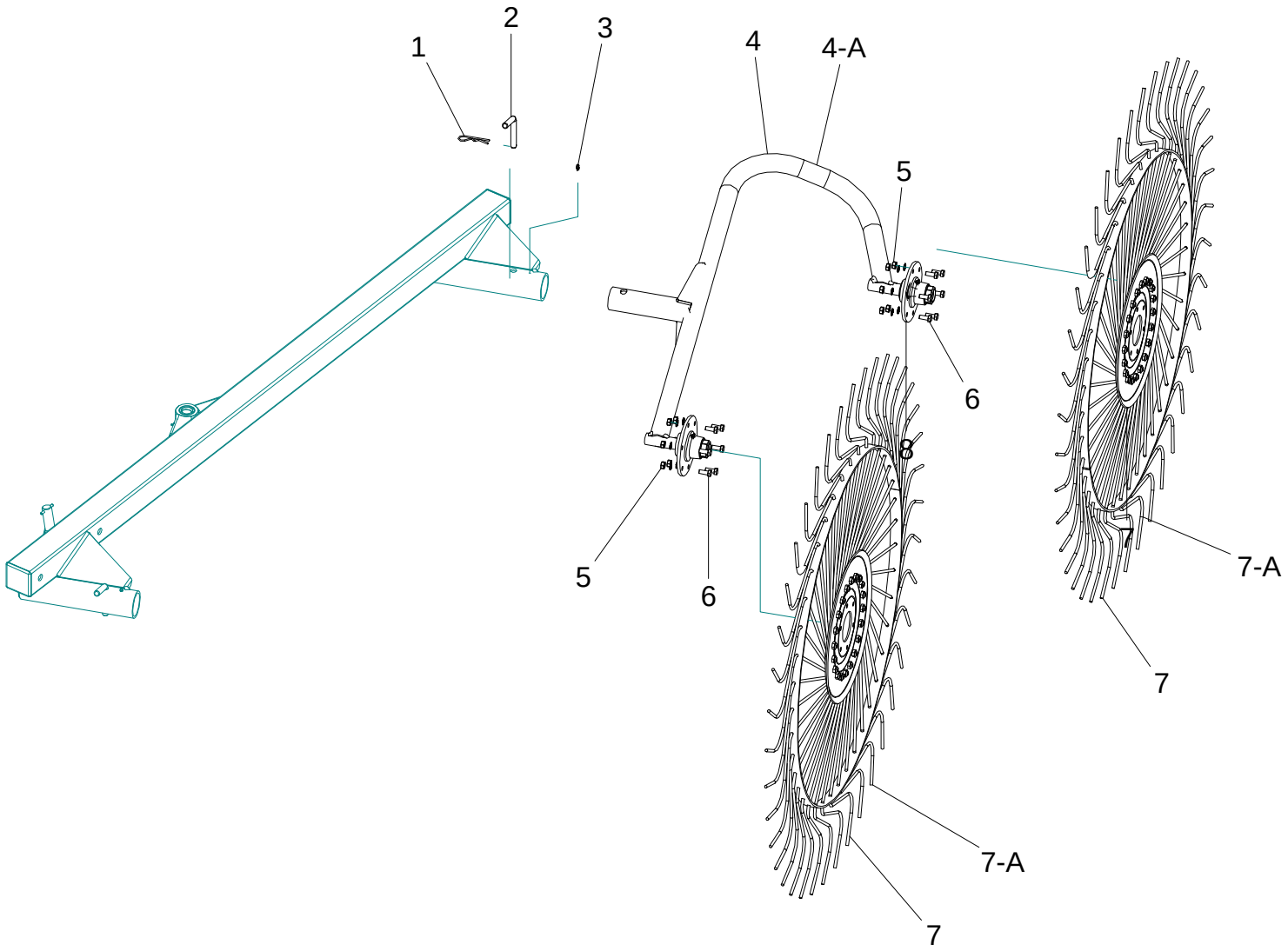

Tabella 9 – DOUBLE ARM VERSION, HUB AND RAKE WHEEL / telaio / braccetto doppio / mozzo / stella cod. 19010540

POS.	CODICE	DESCRIZIONE	DESCRIPTION	MODEL
01	3040201	Coppiglia	SPLIT PIN	
02	12120107	Spina Ø15x180	PIN 15X180	
03	3090102	Ingrassatore diritto M6x1	GREASE ZERK	
04	18032787	Tubo braccetto SX	LEFT ARM	
04/A	18032788	Tubo braccetto DX	RIGHT ARM	
05	3020328	Dado M10	NUT M10	
06	3011211	Vite T.E. M10x25	SCREW TE M10X25	
07	17010812	Ruota stellare grande SX	LEFT RAKE WHEEL	
07/A	17010803	Ruota stellare grande DX	RIGHT RAKE WHEEL	
08	12150101	Mozzo	HUB	
09				
10				
11				
12				
13				
14				
15				
16				
17				
18				
19				
20				

Tavola 10 – HYDRAULIC SCHEME / circuito idraulico cod. 19010538

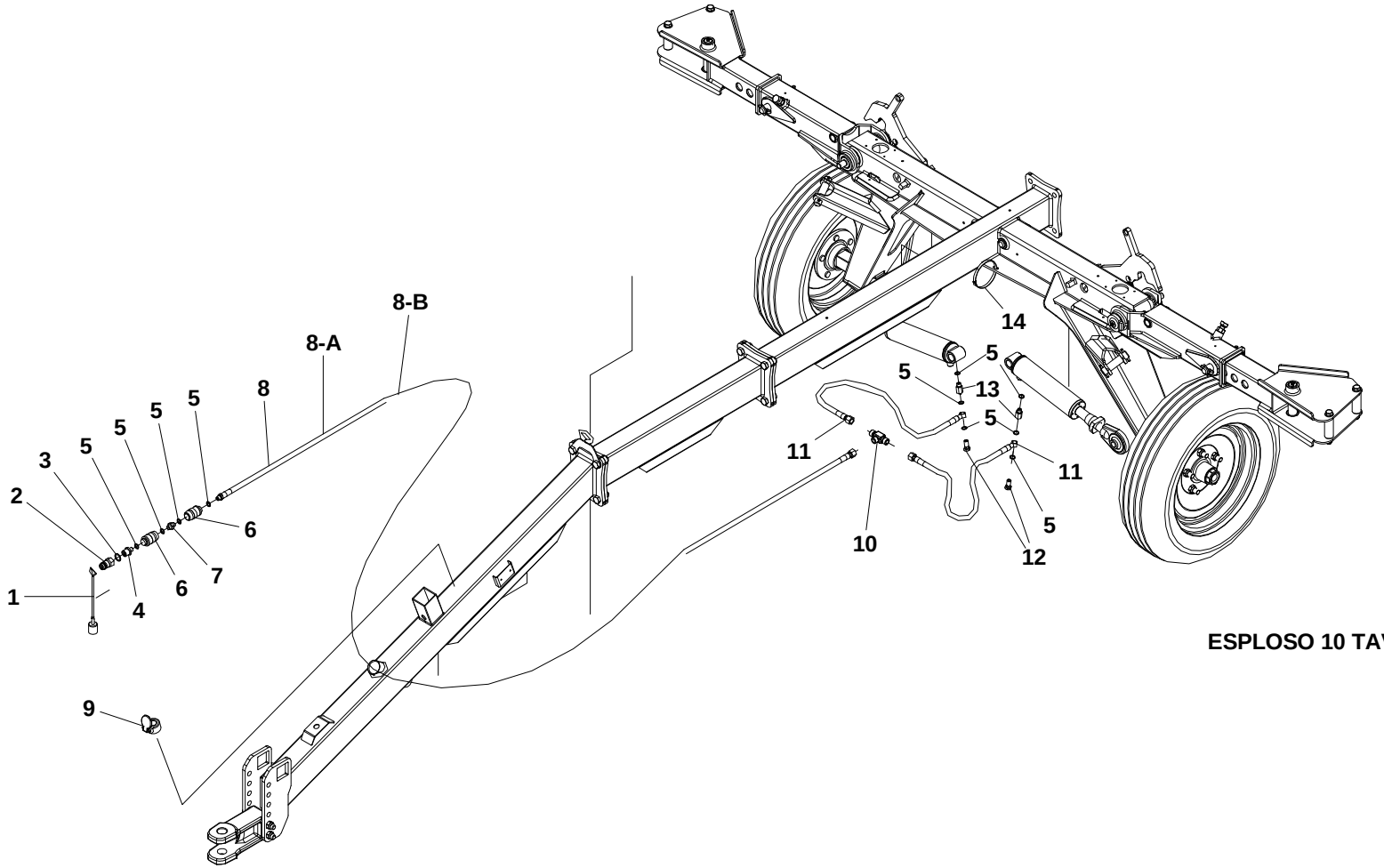

ESPLOSO 10 TAV.RICAMBI

Tabella 10 – HYDRAULIC SCHEME / circuito idraulico cod. 19010538

POS.	CODICE	DESCRIZIONE	DESCRIPTION	MODEL
01		Tappo di protezione per innesto	CAP	
02	4011804	Innesto rapido ½	PUSH PULL	
03	3030402	Rondella in rame ½	COPPER WASHER	
04	4010211	Nipplo riduzione ½ - ¼	NIPPLE	
05	3030406	Rondella rame ¼	COPPER WASHER	
06	4020403	Valvola regolazione flusso	FLOW VALVE	
07	4010212	Nipplo ¼	NIPPLE	
08	12760715	Tubo idraulico L.3800	HYDRAULIC HOSE L.3800	BATRAKE 8-10 ind. BATRAKE 12 double
08/A	12760717	Tubo idraulico L.4300	HYDRAULIC HOSE L.4300	BATRAKE 10
08/B	12760718	Tubo idraulico L.4600	HYDRAULIC HOSE L.4600	BATRAKE 12
09	12980101	Fermo per tubo idraulico	HYDRAULIC HOSE HOLDER	
10	4010905	Raccordo a tre vie 3/8	T UNION	
11	12760716	Tubo idraulico	HYDRAULIC HOSE	
12	3011643	Vite forata ¼	DRILLED SCREW	
13	4011702	Prolunga ¼	EXTENSION	
14	4010726	Fascetta in plastica	CLAMP	

Tavola 11 – kicker wheel cod. 19010541

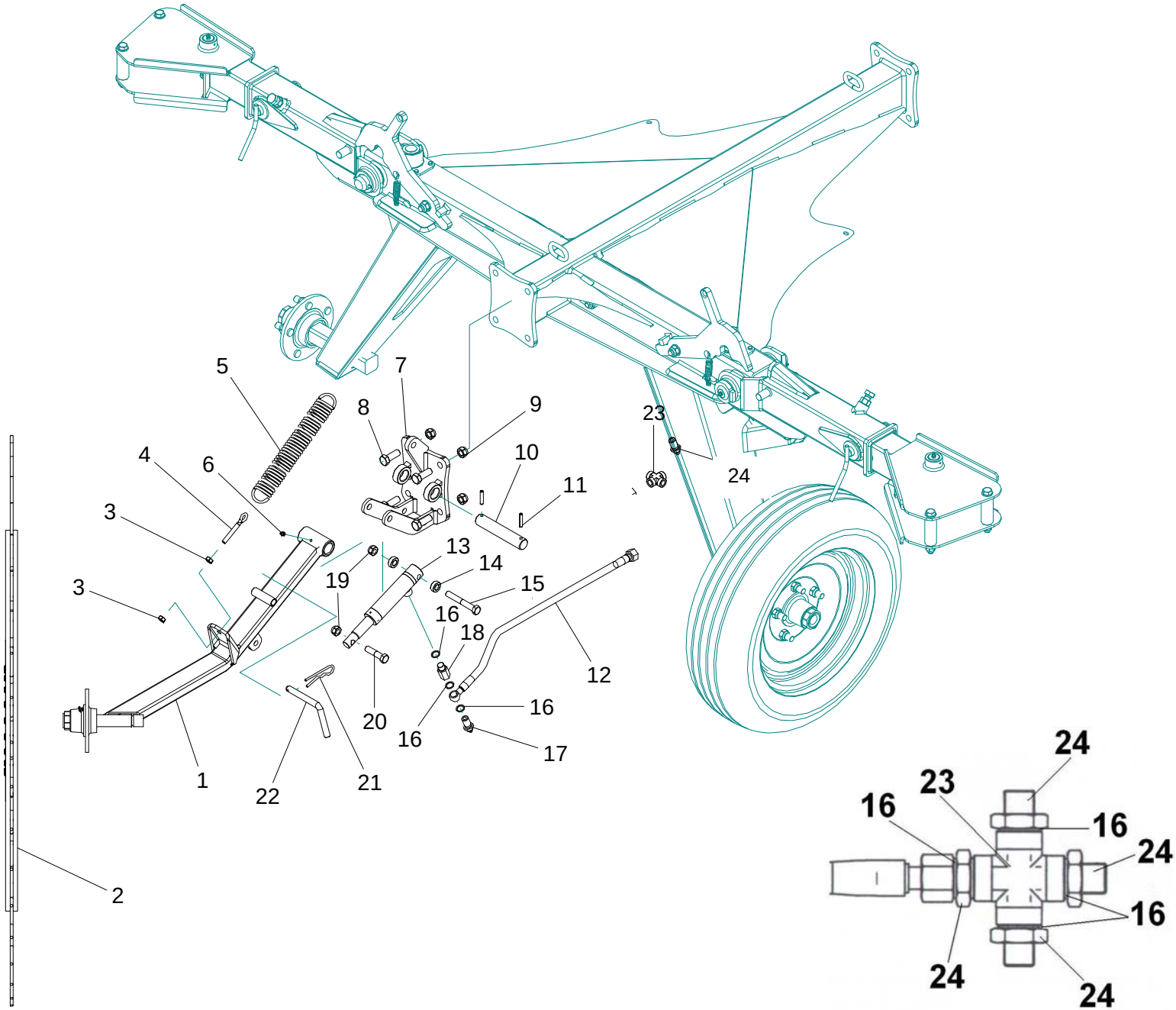

Tabella 11 – kicker wheel cod. 19010541

POS.	CODICE	DESCRIZIONE	DESCRIPTION	MODEL
01	18032609	Braccio kicker wheel	KICKER WHEEL ARM	
02	18031808	Ruota stellare	RAKE WHEEL	
03	3020203	Dado M10	NUT M10	
04	3220201	Anello tenditore	THREADED RING	
05	11010534	Molla di richiamo	SPRING	
06	3090101	Ingrassatore diritto M8x1	GREASE ZERK	
07	18032610	Attacco	BRACKET	
08	3011645	Vite T.E. M16x45	SCREW TE M16X45	
09	3020204	Dado autobloccante M16	SELF LOCKING NUT M16	
10	18032612	Perno per attacco braccio	ARM PIN	
11	3080123	Spina elastica 8x40	SPRING PIN 8X40	
12	12760719	Tubo idraulico L.700	HYDRAULIC HOSE L.700	
13	18032613	Martinetto idraulico 40-30/100	HYDRAULIC CYLINDER 40-30/100	
14	18032611	Rondella 28x14.5x11	WASHER 28X14.5X11	
15	30112668	Vite T.E. M14x100	SCREW TE M14X100	
16	3030403	Rondella rame 3/8	COPPER WASHER	
17	4021503	Vite strozzatrice 3/8	DRILLED SCREW	
18	4011704	Prolunga 3/8	EXTENSION	
19	3020203	Dado autoblocc. M14	SELF LOCKING NUT	
20	3011202	Vite T.E. M14x60	SCREW TE M14X60	
21	3040201	Coppiglia Ø3X60	SPLIT PIN Ø3X60	
22	12120104	Spina Ø15x198	PIN 15X198	
23	4010907	Croce 3/8 F/F/F/F	*CROSS UNION 3/8*	
24	4010207	Nipplo 3/8	*NIPPLE 3/8*	

ENOAGRICOLA ROSSI s.r.l.
06018 Calzolaro di Umbertide Perugia Italia
Tel. (39) 075-930 22 22 - Telefax (39) 075-930 23 28

e-mail: enorossi@enorossi.it – info@enorossi.it
web: http://www.enorossi.it - http://www.enoagricolarossi.com