DISC MOWER DM SERIES / 7-8

USER'S AND MAINTENANCE MANUAL

ENOAGRICOLA ROSSI s.r.l.
06018 Calzolaro di Umbertide – Perugia – Italy
Tel. (39) 075-930 22 22 – Telefax (39) 075-930 23 28
e-mail: enorossi@enorossi.it – info@enorossi.it
web: http://www.enorossi.it - http://www.enoagricolarossi.com

Contents

Section 1 – General information

Assistance	For any needs, contact the machine dealer or the ENOAGRICOLA ROSSI Technical Office.
CE Marking	This mark certifies that the machine complies with the safety requirements set by the European Union. **ENOAGRICOLA ROSSI** 06018 Calzolaro di Umbertide-Perugia-Italy CE **ROTARY DISC MOWER**
CE Conformity declaration	**ENOAGRICOLA ROSSI srl** 06018 Calzolaro di Umbertide-Perugia-Italy declares under its exclusive responsibility that the machine **ROTARY DISC MOWER** Mod..... Series..... to which this declaration refers, conforms to the essential safety requirements established by Directives 89/392/EEC, 91/368/EEC, 93/44/EEC, 93/68/EEC. The legal representative

Section 2 – Use of the manual

BEFORE INSTALLING AND USING THE MACHINE

OR BEFORE CARRYING OUT ANY OPERATION

READ CAREFULLY THE INSTRUCTIONS CONTAINED IN THIS MANUAL

This manual has been written for your safety. It is an integral part of this machine and must be kept for reference at all times, protecting it from moisture, neglect, and sunlight in order to prevent its deterioration.

The manual is intended for: the machine users, the owner, the safety supervisors, those in charge of handling, installation, use, supervision, maintenance, and final dismantling.

The manual provides indications on the correct use of the machine, its technical features, and safety measures; this manual, in any case, can never replace an adequate experience of the user.

The manual also gives information for personnel training, for guiding maintenance operations, facilitating the request for spare parts, and warning about remaining risks that could not be eliminated in the design phase.

The manual reflects the state of the machine's technical status as sold and cannot be considered inadequate if subsequently updated on the basis of new experience.

The company supplying the machine reserves the right to make any changes to the product and its manual without the obligation to update previous production and related manuals.

N.B. Enoagricola Rossi accepts no liability for damages resulting from improper use by untrained personnel, use not in accordance with national and Community workplace safety requirements, incorrect installation, serious deficiencies in the required maintenance, unauthorized changes or repairs, use of unauthorised spare parts, acts of God, or total or partial failure to follow the instructions contained in this manual.

The machine has been designed in conformity with European machine safety standards and, in particular, the following standards have been considered:

1. EN 292/2 Ed. 1991: Safety of machine. Fundamental concepts and general principles of mechanical design. Technical specifications and principles.
2. ISO 7000 Ed. 1994: Safety decals to be used on machine.

The machine must be used by operators who:

1. Have a good knowledge of safety standards and regulations.
2. Are well informed on risks of this machine and dangerous areas and on the importance of not tampering with protection guards.
3. Have been well trained on how to operate the machine.
4. Will inform manufacturer of any malfunctioning.

In the event this manual is lost or damaged, a new copy may be requested from this address:

ENOAGRICOLA ROSSI Srl
06018 Calzolaro di Umbertide – Perugia – Italy
Tel 075 / 930 22 22 Fax 075 / 930 23 28

IMPORTANT! If the machine is sold, please turn this manual over to the new owner.

Section 3 – Machine assembly

To facilitate shipments of the machines, several parts have been disassembled to reduce the shipping dimensions. To reassemble, proceed as follows:

- Open the case and lay the mower disc bar flat as indicated in Fig. 1.
- Turn the frame and the 3rd point using a lifting device (hoist, lift truck, etc.) and position the mower disc bar as in Fig. 2

Fig. 1

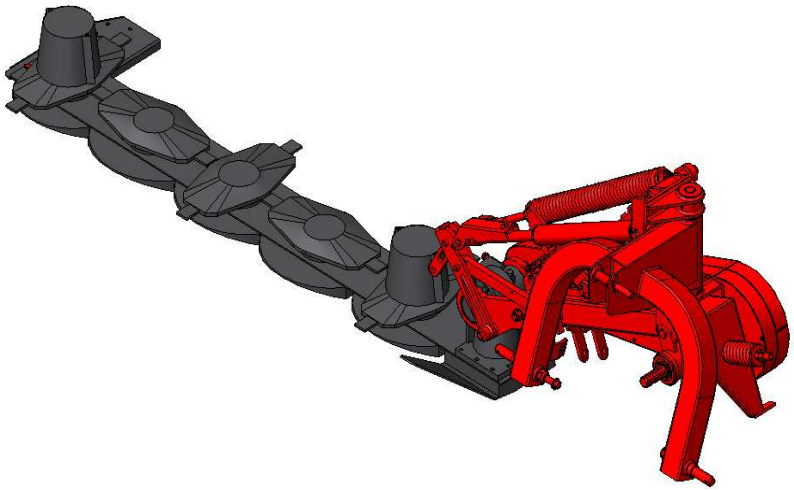

Fig. 2

1st assembly – assembly of the protection support.

Mount protection support **A** (Fig. 3 – Fig. 3/A) in gear case **B**; first of all, connect the lifting rod hole to support **D** (Fig. 3). Fasten the support with screws **C** (screw T.E. M12x50 and washer M12 **Y** and spacer **J**.

2nd assembly – assembly of the protection bar (only on DM-P series).

Position the protection bar **E** in support **A** (Fig. 4) and fasten it with six screws **F** (screw T.E. M10x35), six washers, and six self-locking nuts **G** M10 (only on DM-P series).

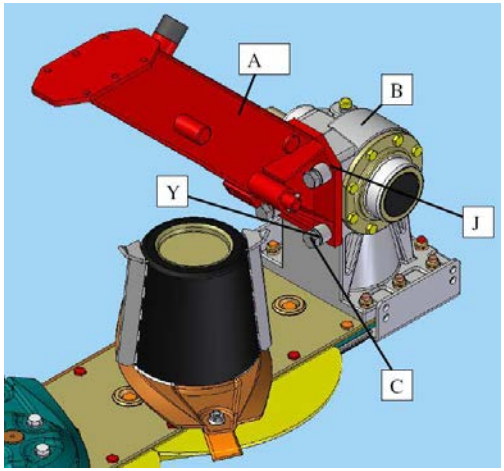

Fig. 3/A

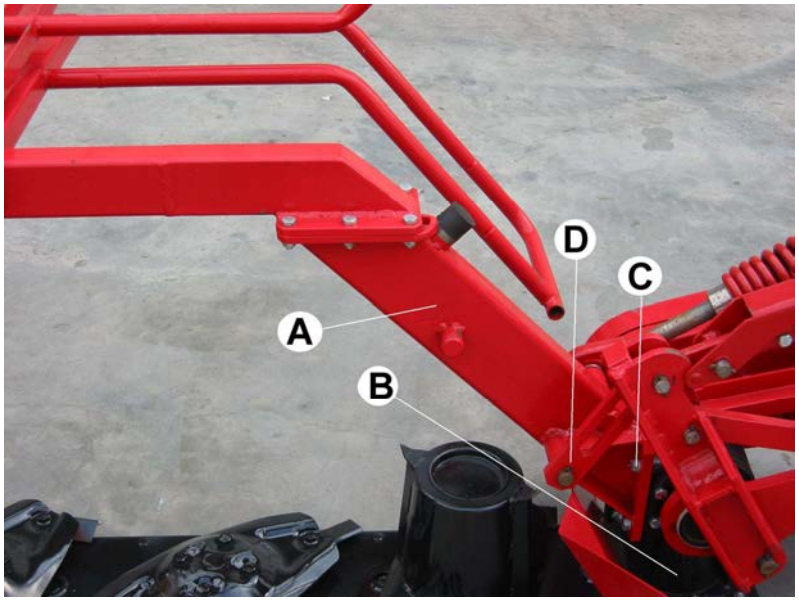

Fig. 3

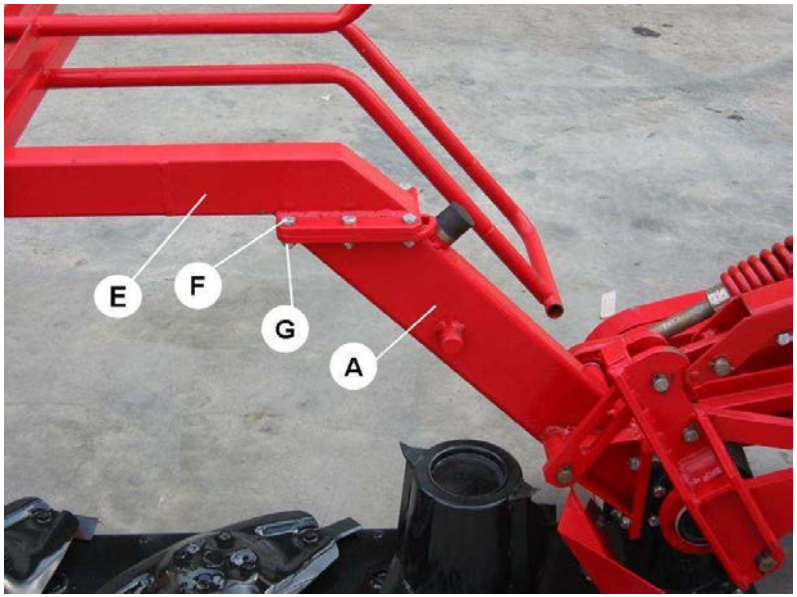

Fig. 4

3rd assembly – support rod.

Mount support rod **H** (Fig. 5), and fasten with screws **M** (T.E. M12x90 + self locking nut), and screws **N** (T.E. M10x30 + self locking nut M10)

4th assembly – assembly of the side rake disc.

Fasten rake disc unit **I** on the central bar **M** (Fig. 5). Fasten it using screws **P** (T.E.M10x70 + self locking nut M10) and plate **Z** (115x95x10)

Make sure the rake disc does not touch the cone cover and blades. Observe the safety distance X= from 15 to 25 mm. (Fig. 6).

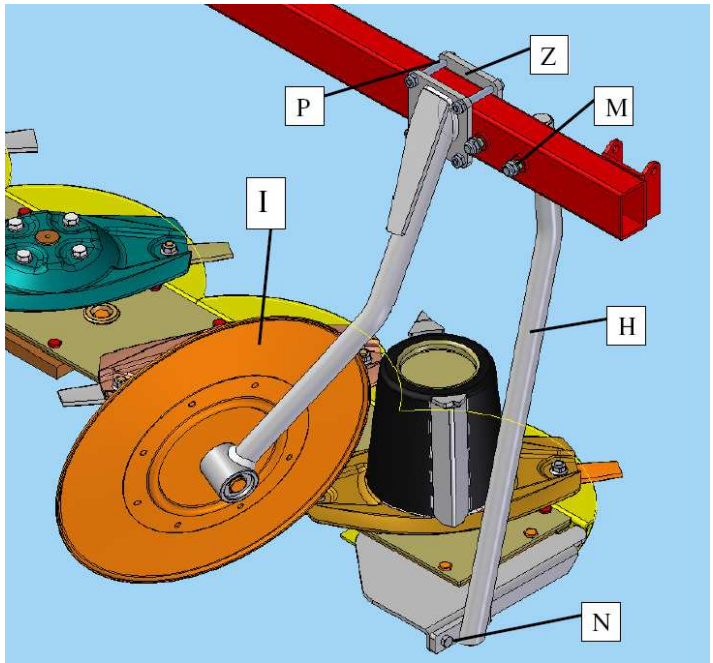

Fig. 5

Fig. 6

5th assembly – assembly of the internal cone disc.

Mount internal cone disc **M** (Fig. 7) so that the largest dimension is oriented perpendicular to that of the nearby disc.

6th assembly – assembly of the lower slide and protection plate.

Lift the mower and mount the lower slide **N** (Fig. 8) and slide tip **O**. Fasten them with four screws **P** (T.E. 12x30 + self-locking nuts + washer) and two screws **Q** (TTQS M10x25 + washer + self locking nut).

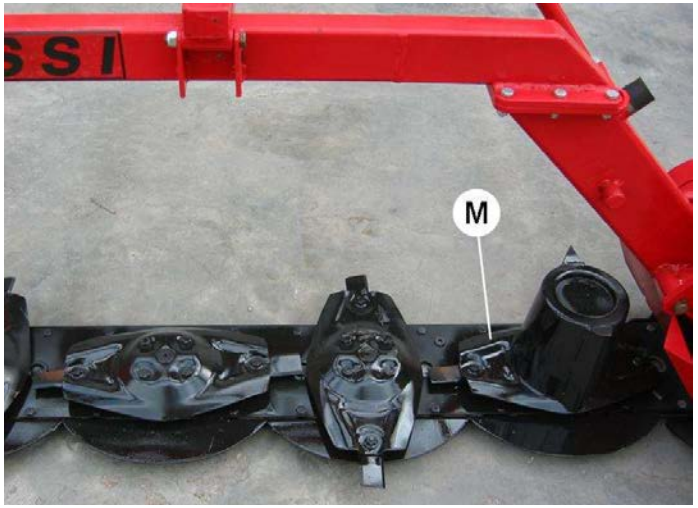

Fig. 7

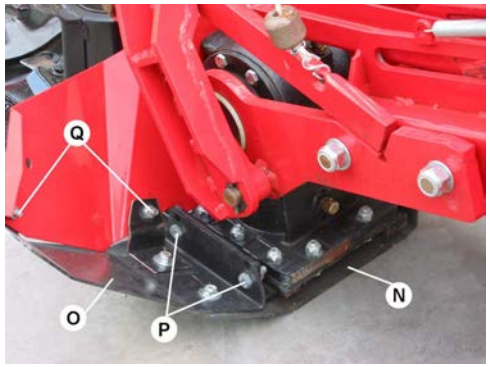

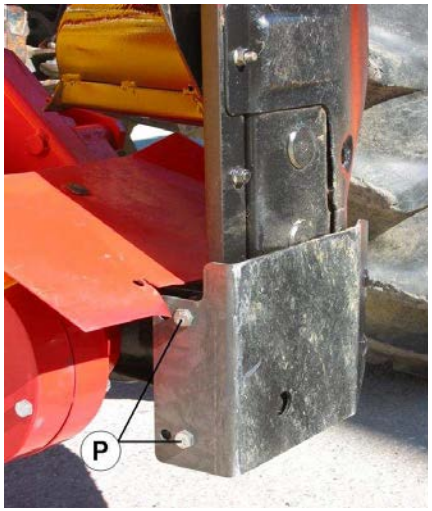

Fig. 8

7th assembly – assembly of internal protective flap.

Mount flap **R** (Fig. 9) protecting the gear case and fasten it with connecting bracket **S** and three screws **T** (TTQS M10x25 + washer + self locking nut). To facilitate assembly of flap **R**, it is advisable to insert all screws before starting to tighten them.

8th assembly – assembly of the belt protection case.

Mount case **U** (Fig. 10), fasten with screws **V** (T.E. M10x120), washers and self-blocking nuts (M10).

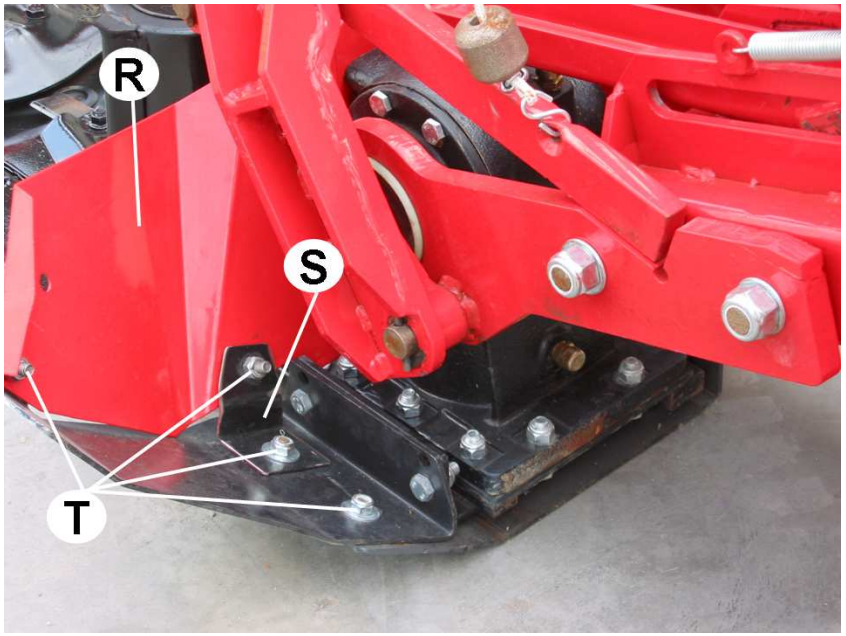

Fig. 9

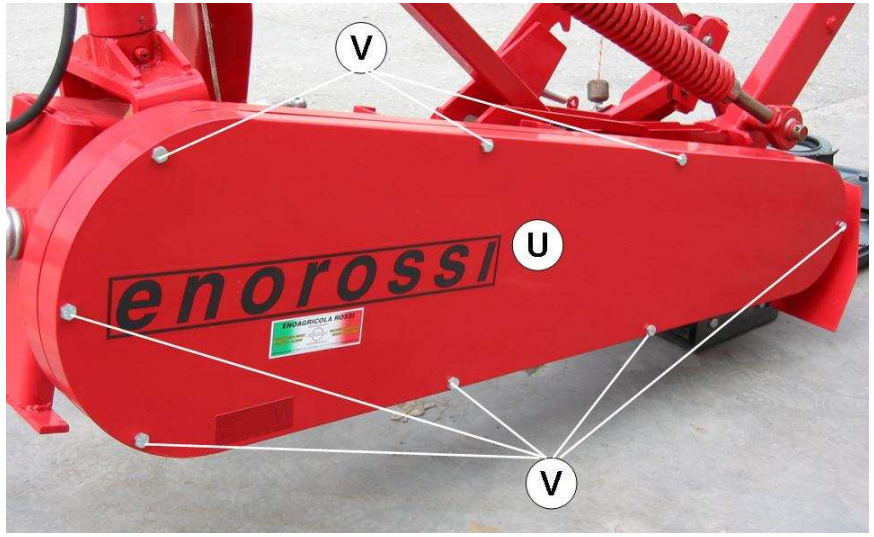

Fig. 10

9th assembly – compensating spring.

Hook spring **W** (Fig. 11) on pin **Y** of the protection support and fasten it with an elastic pin Ø 6x40.

To facilitate this operation, attach the machine to the tractor, lifting it until the support hole is aligned with pin **Y** (Fig. 11).

10th assembly – assembly of the release cord.

Insert cord **A** (Fig. 12) through ring **B**, then fasten the hook to safety hook **C**. Close the hook with a pliers. Insert cord **D** through ring **E** and tie safety hook **C** (Fig. 13), making a knot in the hole.

Mount hydraulic pipe **G** on the hydraulic piston, with the perforated screw, positioning the copper washers (Fig. 13).

Fig. 11

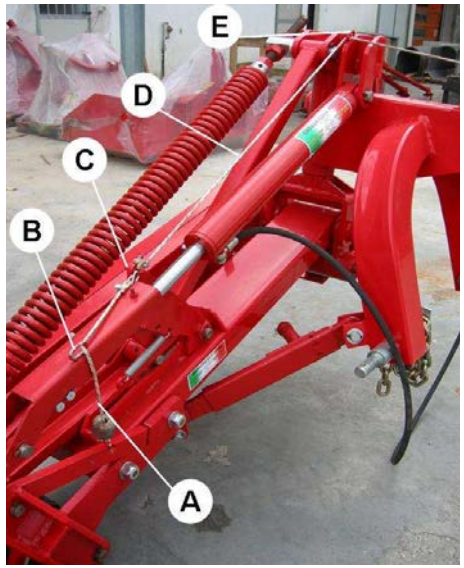

Fig. 12

Fig. 13

11th assembly – assembly of protection guards.

Mount front guard **H** (Fig. 14) on the three hinges and fasten with screws **I** (T.E. M12x100) and self-locking nuts M10 + washer.

Mount rear guard **L** with six screws **M** (TTQS M10x25) and self-locking nuts M10.

Assemble the protection guard frame and fasten it to the supporting structure using the ties found under the tarpaulin (Fig. 15).

Assemble the protection rod for tarpaulin **N** (Fig. 17) and at the same time assemble (Fig. 16) front handle **O** and rear handle **P**. Fasten rear handle **P** with screws **Q** (TTQS M10x35), washers, and self-locking nuts M10.

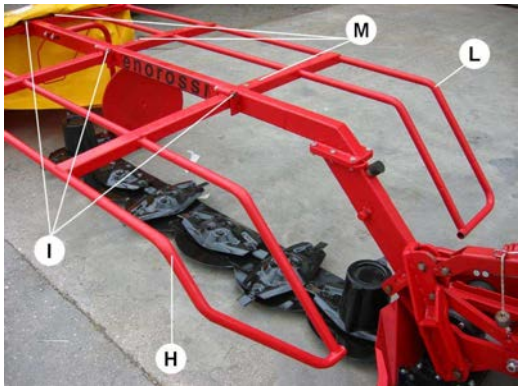

Fig. 14

Fig. 15

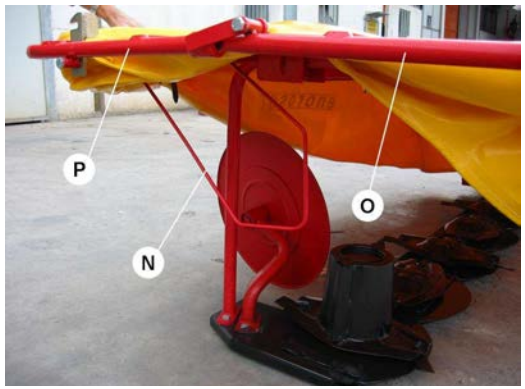

Fig. 16

Fig. 17

12th assembly – blade assembly.

Check the rotation direction of the discs; each blade has an arrow indicating the rotation direction. After tightening the screw and nut, make sure the blade can rotate freely from the oval disc (Fig. 18).

13th assembly – assembly of the protective guard.

Insert the guard into the power takeoff tube and fasten with the band (Fig. 19).

14th Insert pin **A** Ø40x274 on left side; insert pin **B** Ø40x219 on right side see fig. 19. Fasten the pins using nuts **C** M24 + washers Ø24

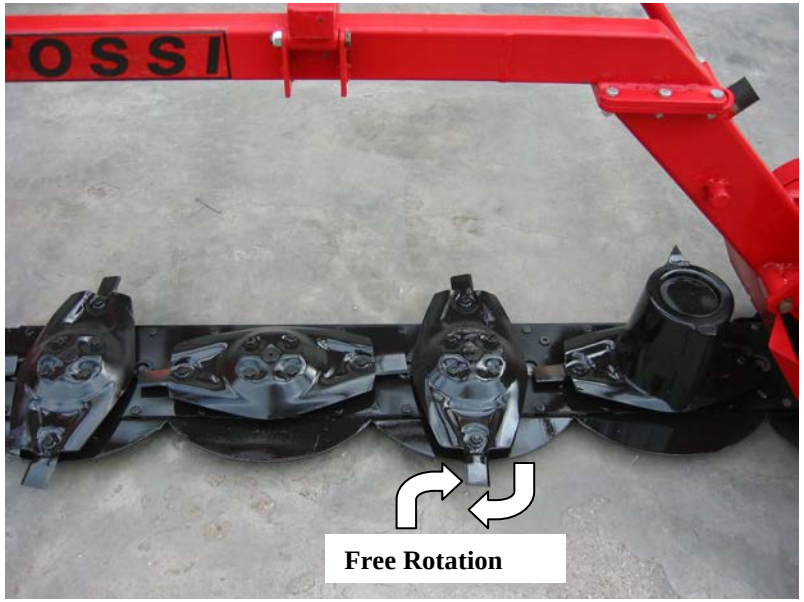

Fig. 18

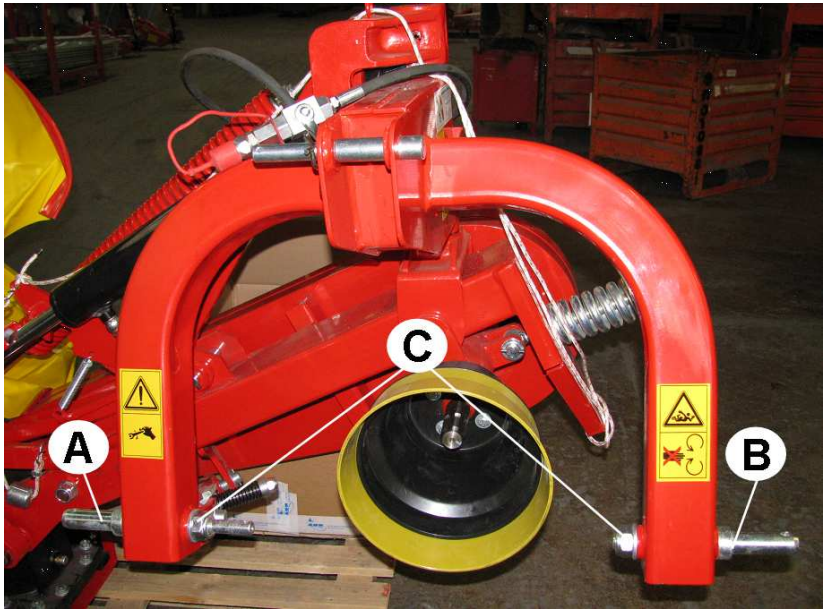

Fig. 19

Section 4 – Attachment of the machine to the tractor

NB: The mower must be attached to a tractor with a power takeoff of 540 rpm and to a 3-point attachment (Fig. 20).

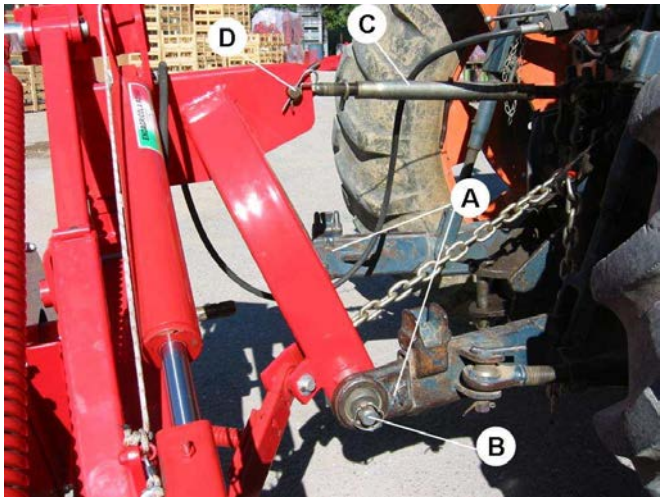

Fig. 20

Instructions for attachment to the tractor:

1) Insert the tractor's lifting arms **A** (Fig. 20) into attachment pins **B** and fasten them with split pins.
2) Insert 3rd point **C** and fasten it with pin **D** (Fig. 20).

Fig. 21

3) Connect the hydraulic pipe of the piston to the tractor's distributor (Fig. 21)

4) Connect the tractor's cardan shaft to the power takeoff of the mower; use chains to prevent rotation of the protection pipe.

5) Lift the machine using the hydraulic lift; turn edge **E** upwards (Fig. 22)

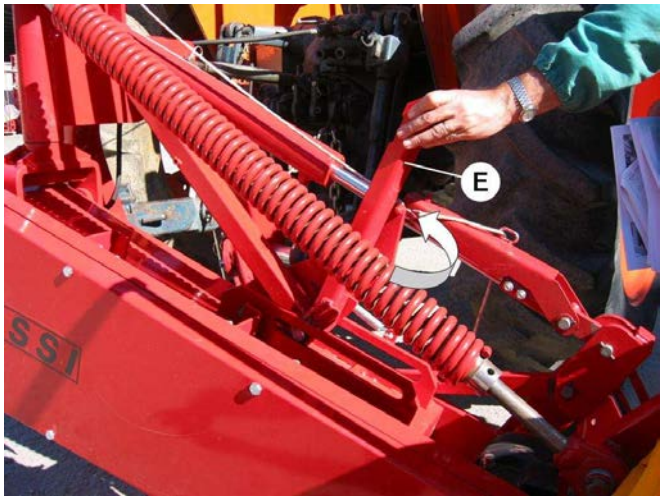

Fig. 22

6) **IMPORTANT!!!** During work and transport, edge **E** must always be turned upwards as in Fig. 23.

Fig. 23

7) **ADJUSTMENT OF FRAME HEIGHT FROM THE GROUND.**

A - ***for tractors equipped with hydraulic lift position control:***

Position the tractor on level ground and lower the hydraulic lift until the lifting lever **F** is positioned at a distance of 4 mm from the edge, as shown in Fig. 24.

After adjusting the height of the mower frame, set the lift control from the tractor driver's seat. In this case it is not necessary to use the limiting chain supplied with the machine.

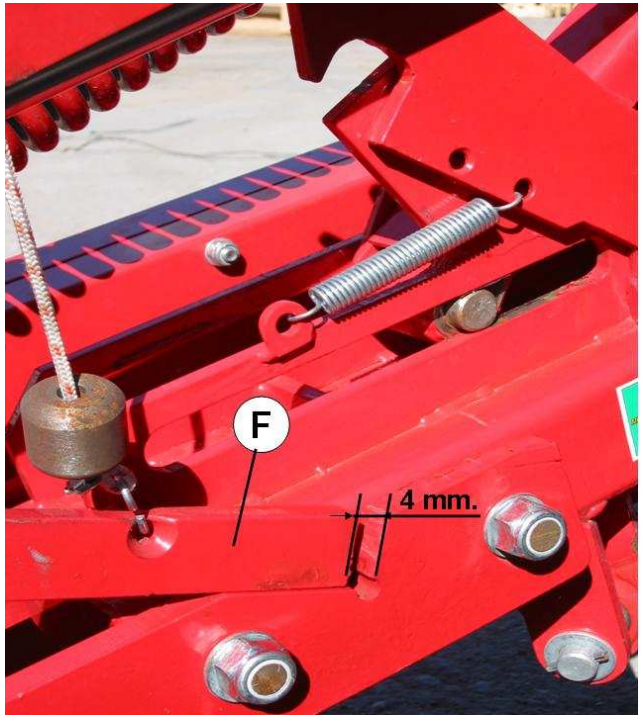

Fig. 24

B – ***for tractors not equipped with hydraulic lift position control:***

The chain supplied with the machine must be used.

Fasten bracket **G** (Fig. 25) and the limiting chain **H** supplied, to one of the free holes of the tractor's third point.

Lower the machine to work position, until lifting lever **F** is positioned at a distance of 4 mm from the edge, as shown in Fig. 24. Limiting chain **H** must be taut (Fig. 25), and the lifting lever must be at a distance of 4 mm. as per Fig. 24.

To be able to always recognize this position, mark the chain ring that will be hooked with bracket **G**.

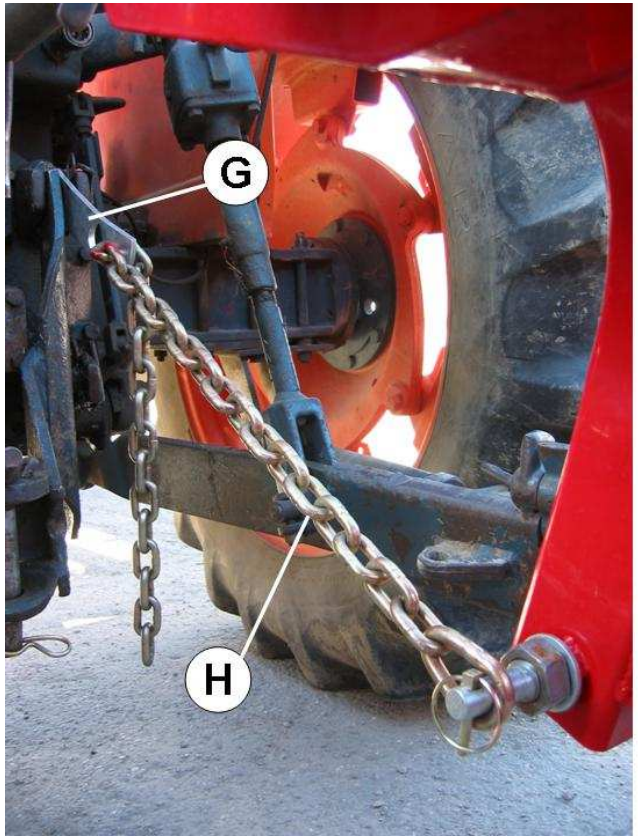

Fig. 25

Section 5 – Cardan shaft

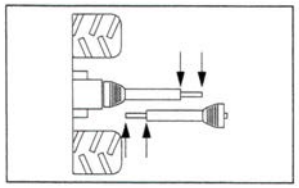

The cardan shaft supplied with the mower is of the correct size for coupling with most tractors on the market.
In any case, before starting work for the first time, it is advisable to check its length.
If adaptation is required, proceed as follows:

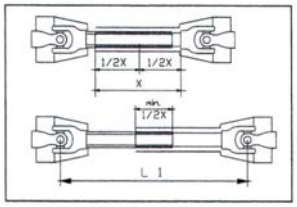

Important!
Use only the cardan shaft supplied or recommended, otherwise any warranty claim or request will be considered null and void.

If the cardan shaft is too long, open the two halves and overlap them; this way it will be possible to determine how much longer it is in cm.

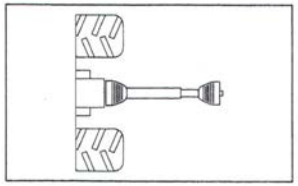

Cut both tubes of the internal and external cardan shaft to the same length, as well as their guards.
Clean the cut edges of the tubes with a file, grease them, and reclose the cardan shaft.
Important!
The maximum work length (L1) must allow an overlapping of the tubes equal to half the length of the closed cardan shaft (min. _X).

Always make sure that the cardan shaft is correctly tightened before starting work

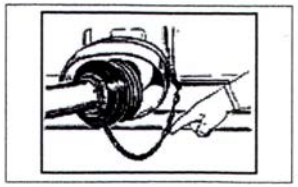

Support chain

Use the chain to prevent rotation of the protection tube.
Make sure that the chain does not hamper the side movements of the cardan shaft.

Section 6 – Transport position

Before moving the mower into transport position, send away all persons who may be in the manoeuvring area.

To position for road transport or for moving from one field to another, carry out the following operations:

1) Disconnect the tractor power takeoff, and make sure the discs have stopped rotating.
2) Turn front guard **I** backward until the fastening point with hook **L** (Fig. 26).

Fig. 26

3) Lift the bar using the tractor's hydraulic lift, positioning lower slide **M** at about 15-20 cm from the ground (Fig. 27).

4) Edge **E** must be turned upwards (Fig. 22 – Fig. 23 Pag. 15).

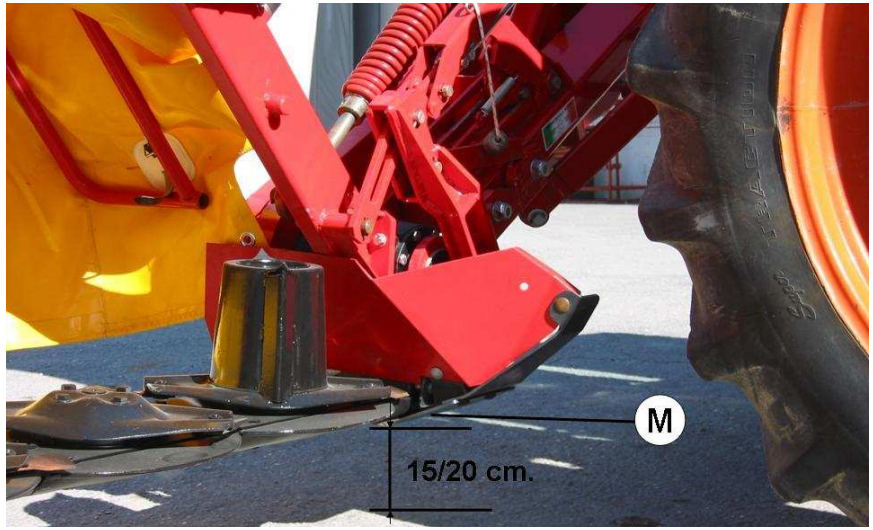

Fig. 27

	5) Pull cord **O** to free lifting lever **P** (Fig. 28).	 Fig. 28
	6) Slowly lift the mower to a vertical position, using the hydraulic hitch. Release the traction of cord **O** (Fig. 29) while raising the bar vertically; it will automatically hook up, for transport, with safety hook **P1**.	 Fig. 29

Section 7 – Work position and adjustment

Before moving the mower into the work position, send away all persons who may be in the manoeuvring area.

To switch the bar from transport position to work position, carry out the following operations:

1) give pressure to the hydraulic hitch to lighten the weight on safety hook **P1** (Fig. 30).

2) Pull cord **O** to free the bar from safety hook **P1** (Fig. 30).

3) Lower the mower using the hydraulic cylinder until it reaches the work position.

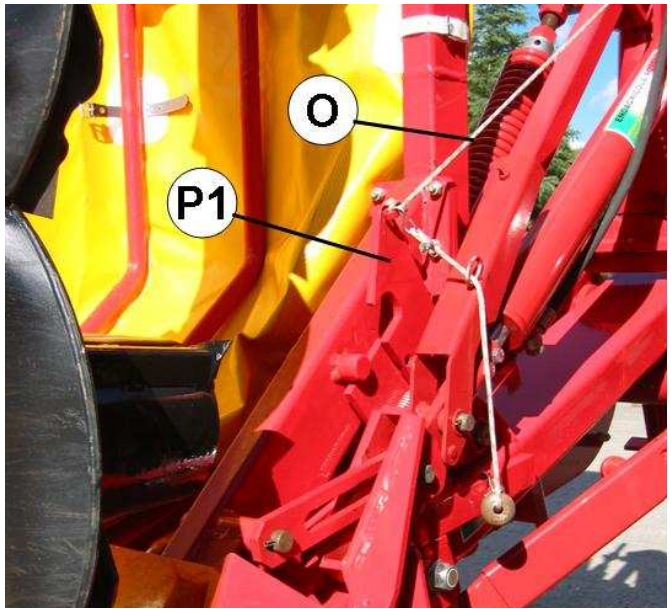

Fig. 30

4) Turn the front tarpaulin carrier over forward.

(Fig. 31)

5) Check the height of the frame from the ground.

Lifting lever **F** (Fig. 24, Page 20) must be positioned at a distance of 4 mm from the edge.

Fig. 31

Section 8 – Use of the mowing machine

Before starting work, make sure that there are no persons close to the work area.

Check that protective guards are lowered and the protective tarpaulin is covering the cutting bar.

At this point, carry out the manoeuvres listed below:

1) Connect the tractor's power takeoff and accelerate progressively until reaching 540 rpm.

2) The advancement speed must be appropriate for the working conditions. Reduce speed when changing direction.

3) When work is finished, gradually reduce the speed of the power takeoff, then disconnect it.

IMPORTANT!!!! Do not mow in extremely stony or rocky areas.

4) During work, the tractor's hydraulic distributor must always be in floating position in order to permit an adequate adaptability to the irregularities of the terrain.

The mowing bar can be raised from the ground using the hydraulic cylinder (Fig. 32).

5) Raise the mowing bar using the hydraulic cylinder until the cylinder edge **R** reaches its limit (Fig. 33).

Fig. 32

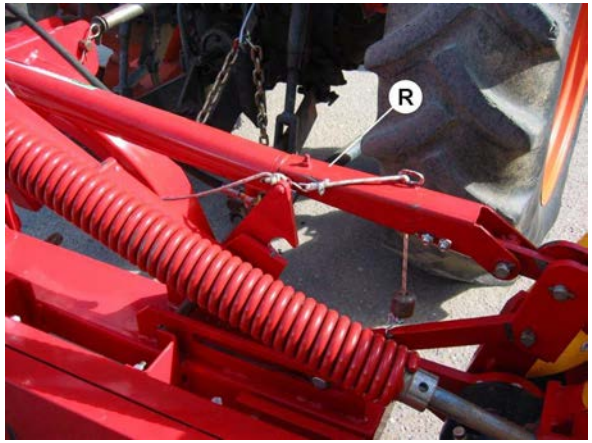

Fig. 33

Section 9 – Adjustments for operation

Adjustment of the side rake disc.

Position the rake disc in order to have the greatest distance between the uncut forage and the windrow.

To set the disc in the correct position loosen the 4 screws pos. A and move to right or left the disc support see fig.34. Once you reach the right position fasten the 4 screws pos. A

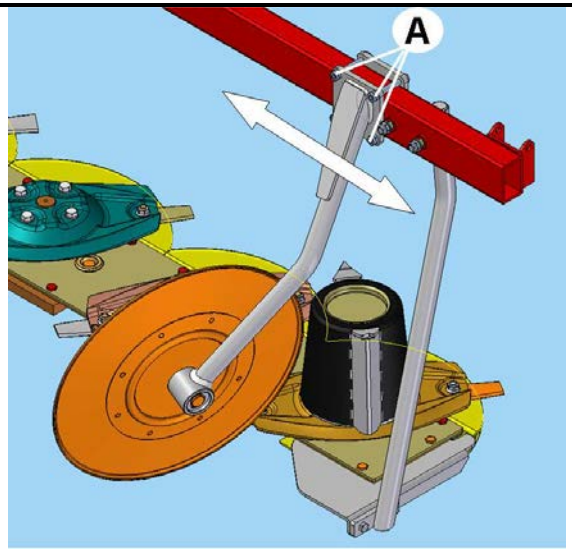

Fig. 34

Adjustment of cutting height.

The maximum and minimum cutting heights are obtained by changing the tilt of the mowing bar, by varying the length of the third point **C** (Fig. 35), until the desired cutting height is obtained. The minimum height must be no less than 30 mm.

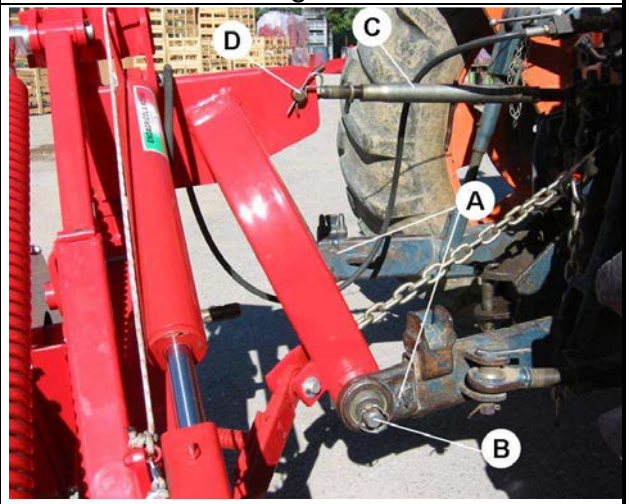

Fig. 35

Adjustment of the safety hook.

If the mowing bar hits an obstacle during work, the safety hook opens and allows the mowing bar to shift backward. In this case, immediately stop the tractor and disconnect the power takeoff.

The safety hook is rehooked by backing up.

NB: Check that all moving parts are well greased. If an obstacle is struck, check to make sure the mowing bar has not been damaged (Fig. 36).

Fig. 36

The distance **T** of the washers to spring **A** must be 95 mm (Fig. 37).

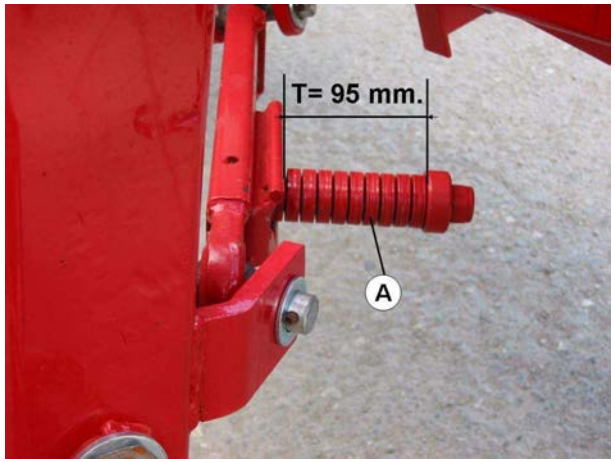

Fig. 37

Detachment of the machine from the tractor.

1) Using the hydraulic hitch, lower the disc mower to a horizontal position. Unlock edge **N** and turn it downwards (see arrow) onto transfer case **U** (Fig. 38 – Fig. 39).

Fig. 38

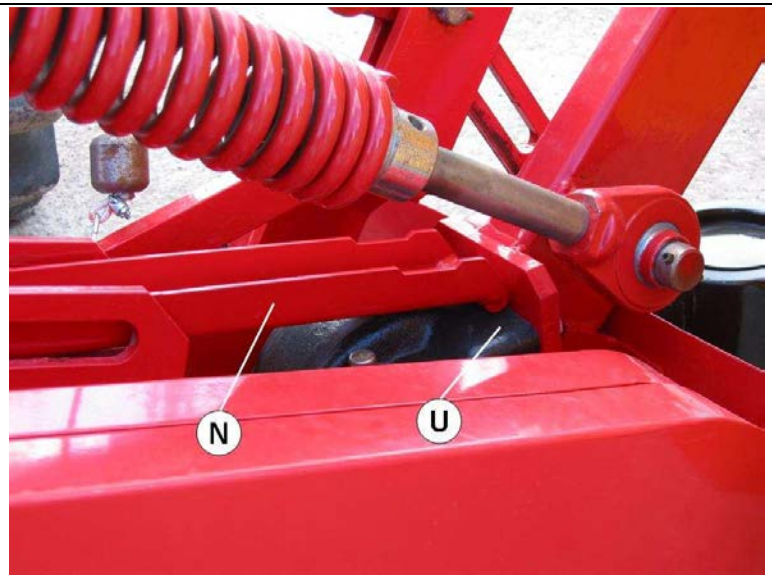

Fig. 39

2) Lower the tractor's hydraulic lift, to lower the machine to the ground.

3) Disconnect the third point and remove the hydraulic tube, closing the tap **V** (Fig. 40).

4) Disconnect the towing bars and cardan shaft.

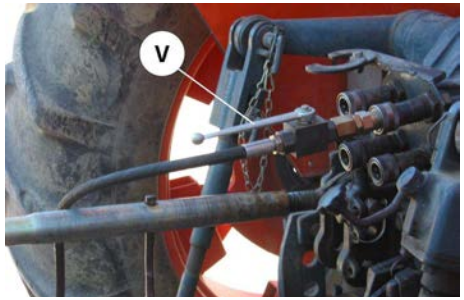

Fig. 40

Section 10 – Checks, maintenance, adjustments.

IMPORTANT!!! Before proceeding with any maintenance or adjustment, turn off the tractor engine, remove the keys, and disconnect the cardan shaft.

1) Checking of discs and blades.

The discs, blades, and fastening screws are made of a special high-quality steel and heat-treated to increase their durability and resistance to wear.

Worn or damaged parts must be immediately replaced with original ENOROSSI parts, otherwise it will not be possible to make any warranty claims or requests.

2) Checking of blade-carrying pins.

Make regular checks of the condition of the blade pins every 50 work hours, and check them more often if work is done on rocky terrain or in difficult conditions.

Check them immediately in the case of violent blows (stones, pieces of wood, etc.).

Replace the blade pin if it is deformed or deteriorated.

Replace the blade pin if the screw head is worn or deteriorated.

Replace the blade pin if the screw head measures less than 13-15 mm (D) (Fig. 41).

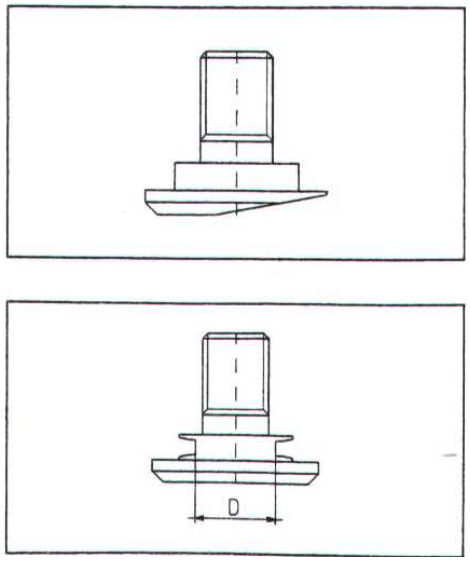

Fig. 41

3) Checking of fastening screws.

Replace the nut when the locking washer has lost its elasticity. Replace the nut if it shows evident consumption (Fig. 42).

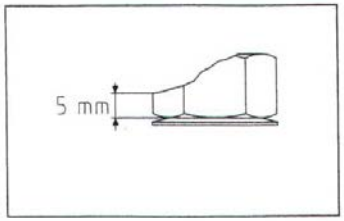

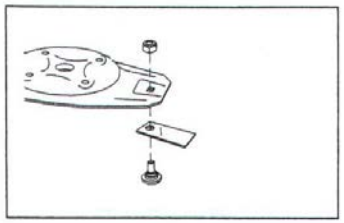

Fig. 42

4) Checking of blades.

Blade replacement.

Rotate the disc perpendicularly (Fig. 43) to the mowing bar and unscrew the nut projecting above the disc using a 19 wrench. Pull out the blade holder from underneath the disc and remove the blade.

Pay attention to the rotation direction of the disc (Fig. 43) and assemble the blade according to the same rotation direction (as indicated by the arrow printed on the blade). All blades on the same disc are the same.

Use original ENOROSSI spare parts.

For your safety, and for a better cutting quality, make systematic checks of the wear condition of the blades before every use of the mower.

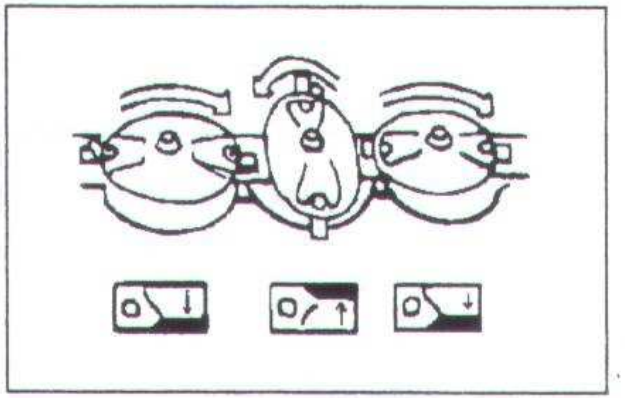

Fig. 43

Change blades immediately if they are damaged, because if work is done occasionally in difficult conditions, the risk of accidents increases, the cutting quality decreases, and vibrations may also damage the disc support.

Replace blades immediately when they are worn down. Blades should be at least 90 mm long (A) and 30 mm wide (B) (Fig. 44).

Replace the blade if the hole has become ovalized to more than 4 mm (L) (Fig. 44).

IMPORTANT!! Make regular checks of the tightness of all fastening screws and nuts, in particular those that hold blades and discs.

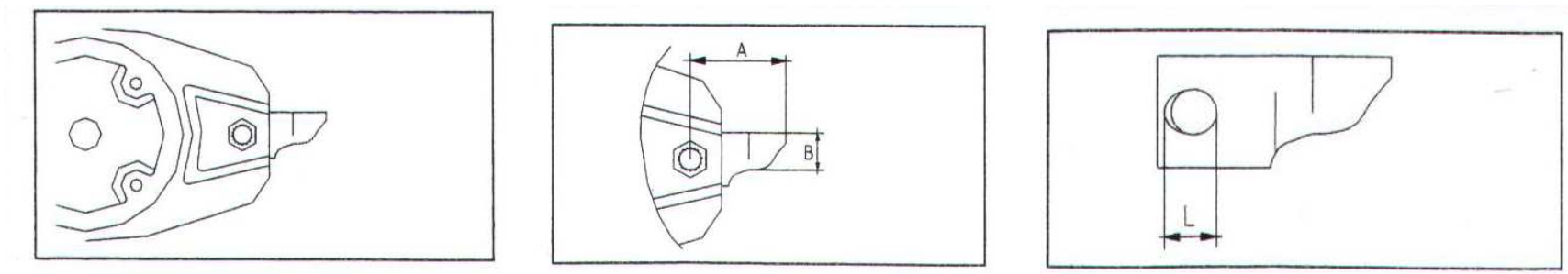

Fig. 44

5) Checking of belts (tension adjustment).

To prevent belt slippage, it is necessary to periodically check the belt tension.

To increase tension, tighten nut **A** on the threaded bar (Fig. 45).

It is very important for the belt tension to be checked after the first hours of work, and later with weekly checks.

Fig. 45

6) Adjustment of the compensating spring.

The spring tension is regulated in the factory; the tension may be changed as follows:

Lift the mower until spring **B** (Fig. 46) is taut. Loosen lock nut **C** and turn **D** to reduce or increase tension. After regulating, lock with locknut **C**.

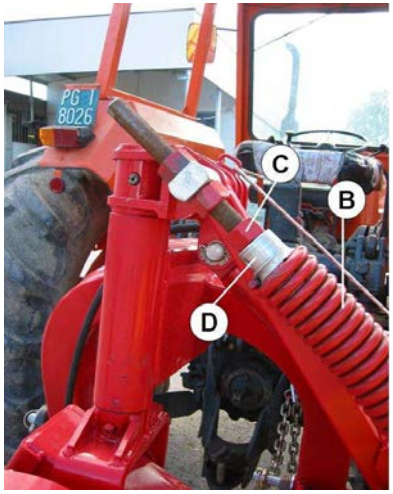

Fig. 46

Section 11 - Lubrication

Lubrication of the mowing bar.

Oil level check.

Check the oil level before starting to mow for the first time, and in normal conditions (no oil leaks) every year.

1) To check the oil level, set the mowing bar horizontally (in working position).

2) Lift the bar using the hydraulic hitch as indicated in Fig. 47.

Mod. D3L: Lift the mowing bar 90° and the filling c ap functions as an oil level.

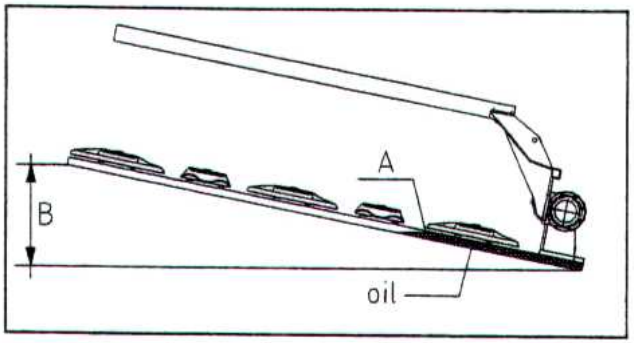

Fig. 47

Mod. D4L: B = 40 cm (Fig. 47).

Mod. D5L: B = 125 cm (Fig. 47).

Mod. D6L: B = 30 cm (Fig. 47).

Mod. D7L: B = 35 cm (Fig. 47).

Mod. D8L: B = 50 cm (Fig. 47).

3) Leave the machine still in this position for 15 minutes, to allow the oil to return into the lower part of the mowing bar.

4) Remove the filling cap and check if the oil reaches the hole (Fig. 48).

5) The oil level is correct when the oil reaches the hole of the filling cap.

Position of the filling cap.

Mod. D3L-D4L-D5L: between the gear case and the first disc (Fig. 48).

Mod. D5L-D6L-D7L: between the first and second disc (Fig. 48).

Mod. D8L: between the second and third disc.

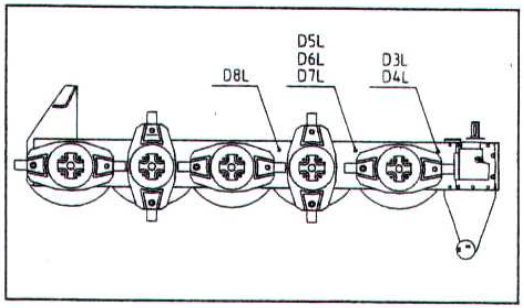

Fig. 48

Oil replacement.

The oil must be replaced completely after the first 50 hours of work, or at least after 100 hectares mowed.

Lift the mowing bar to a vertical position (Fig. 49). Remove the drainage cap situated at the bottom of the mowing bar and let the oil flow out, taking care to collect and dispose of it in accordance with the waste disposal laws and provisions in force.

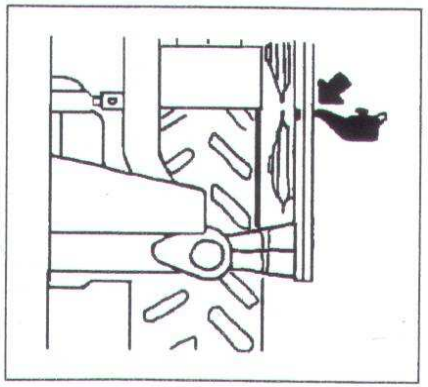

Fig. 49

	Oil replacement must be carried out using hot oil (check that it is not too hot, in order to prevent burns), since in this case the oil is more fluid and flows out more rapidly, preventing the old, much denser oil remaining inside the bar. Fill through the filling cap situated on the upper part of the mowing bar. **Use type SAE 80W90 oil.**	**Oil quantity:** D3L: 1.5 litres D4L: 2 litres D5L: 2.5 litres D6L: 3 litres D7L: 3.5 litres D8L: 4 litres
	NOTE: During work, it is normal for the oil in the tank and the gear case to heat up; there are no problems if the discs turn freely when turned by hand. **Gear case:** Check the level of the gear case oil, with the mower lying horizontal on the ground. Remove the cap with the rod from the upper part of the case (Fig. 50) and check the level of the SAE80W90 type oil. **Cardan shaft lubrication:** Grease the cardan shaft and follow the safety instructions supplied by the manufacturer. **ATTENTION! The operator must maintain the protection in conditions of maximum efficiency. Do not approach the cardan shaft while it is moving.**	 Fig. 50

Section 12 – Requesting spare parts

HOW TO CONTACT ENOAGRICOLA ROSSI
The **ENOAGRICOLA ROSSI** customer help and spare parts service is at your disposal.
To order spare parts, photocopy this page, fill it out with the requested information, and send it by mail or fax to:

ENOAGRICOLA ROSSI s.r.l.
06018 Calzolaro di Umbertide – Perugia – Italy

Tel. (39) 075-930 22 22 - Telefax (39) 075-930 23 28

To facilitate assistance and/or the supply of spare parts, please always provide the following information:

First & last name or Company name	
Fiscal Code and/or VAT No.	
Billing address	
Shipping address (if different from above)	

Ref. #	Code	Description	Quantity

TABLE 1 COD. 19010482

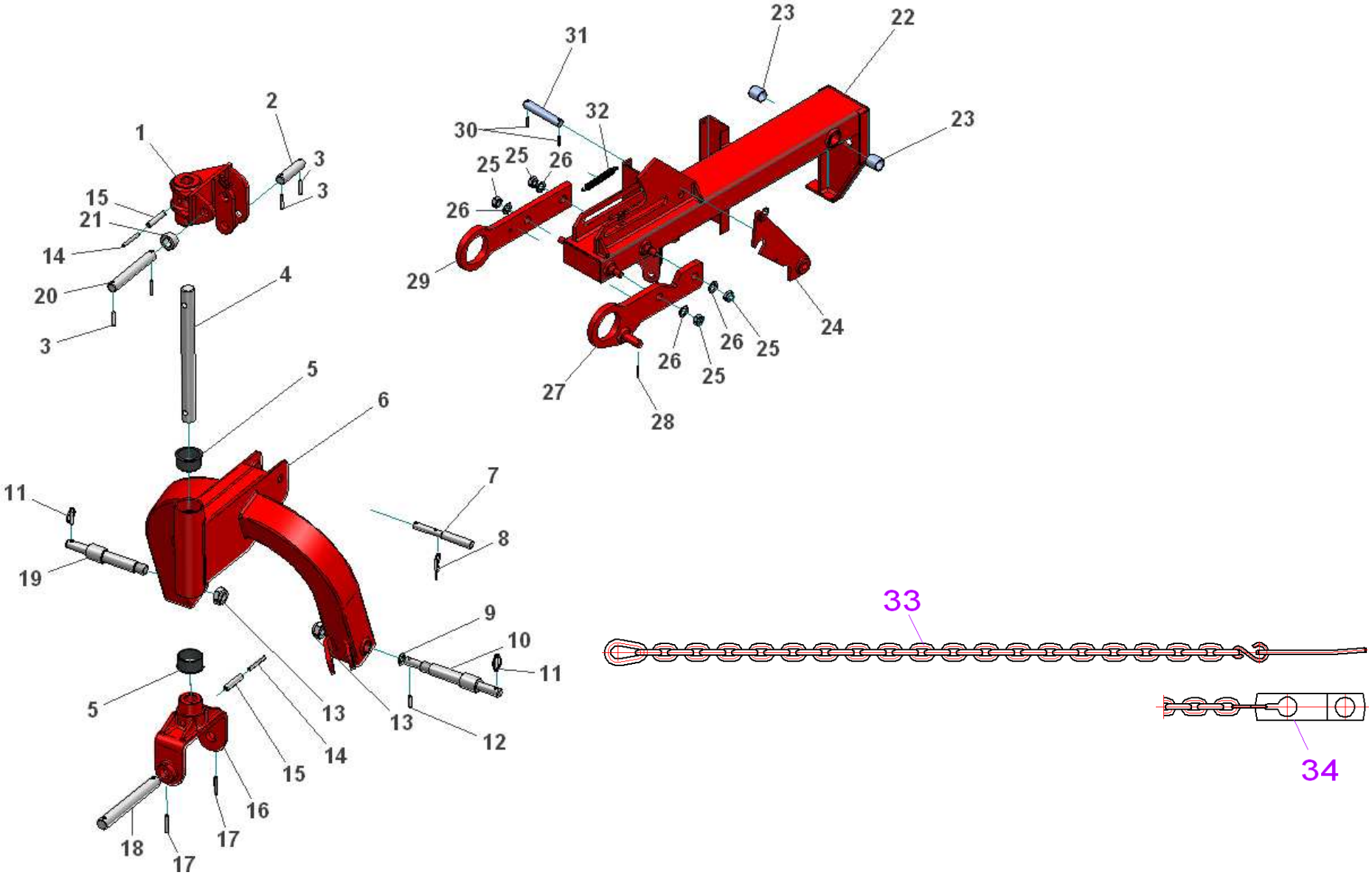

TABLE 1 COD. 19010482

Pos.	Code	Description	Qty	Pos.	Code	Description	Qty	Pos.	Code	Description	Qty
1	18031911	Upper support	1	**14**	3080151	Spring pin 10x85	2	**27**	18031916	Front pivoting hinge	1
2	12880983	Pin	1	**15**	3080150	Spring pin 16x85	2	**28**	3080103	Spring pin 6x40	1
3	3080105	Spring pin 8x50	4	**16**	18031913	Lower support	1	**29**	18031917	Rear pivoting hinge	1
4	12880916	Pin	1	**17**	3080107	Spring pin 10x60	2	**30**	3080102	Spring pin 6x36	2
5	12240196	Sliding bearing	2	**18**	12880909	Pin	1	**31**	12880933	Pin	1
6	18031912	Frame	1	**19**	12880908	Pin	1	**32**	11010529	Spring	1
7	12880915	3-point pin	1	**19A**	12880906	Pin (OPTIONAL)		**33**	18032416	Adjustment Chain	1
8	3040202	Split pin 5x100	1	**20**	12880910	Pin	1	**34**	12880829	Coupling plate	1
9	1013057	Washer M22	1	**21**	12880992	Spacer	1				
10	12880914	Pin	1	**22**	18031914	Frame	1				
10A	12880913	Pin (OPTIONAL)	1	**23**	12240222	Bearing	2				
11	12880614	Pin 8x56	2	**24**	18031915	Transport hook	1				
12	3080146	Pin 10x36	1	**25**	3020216	Self locking nut M20	4				
13	3020228	Self locking nut M30	2	**26**	3030168	washer M30	4				

TABLE 2 COD. 19010483

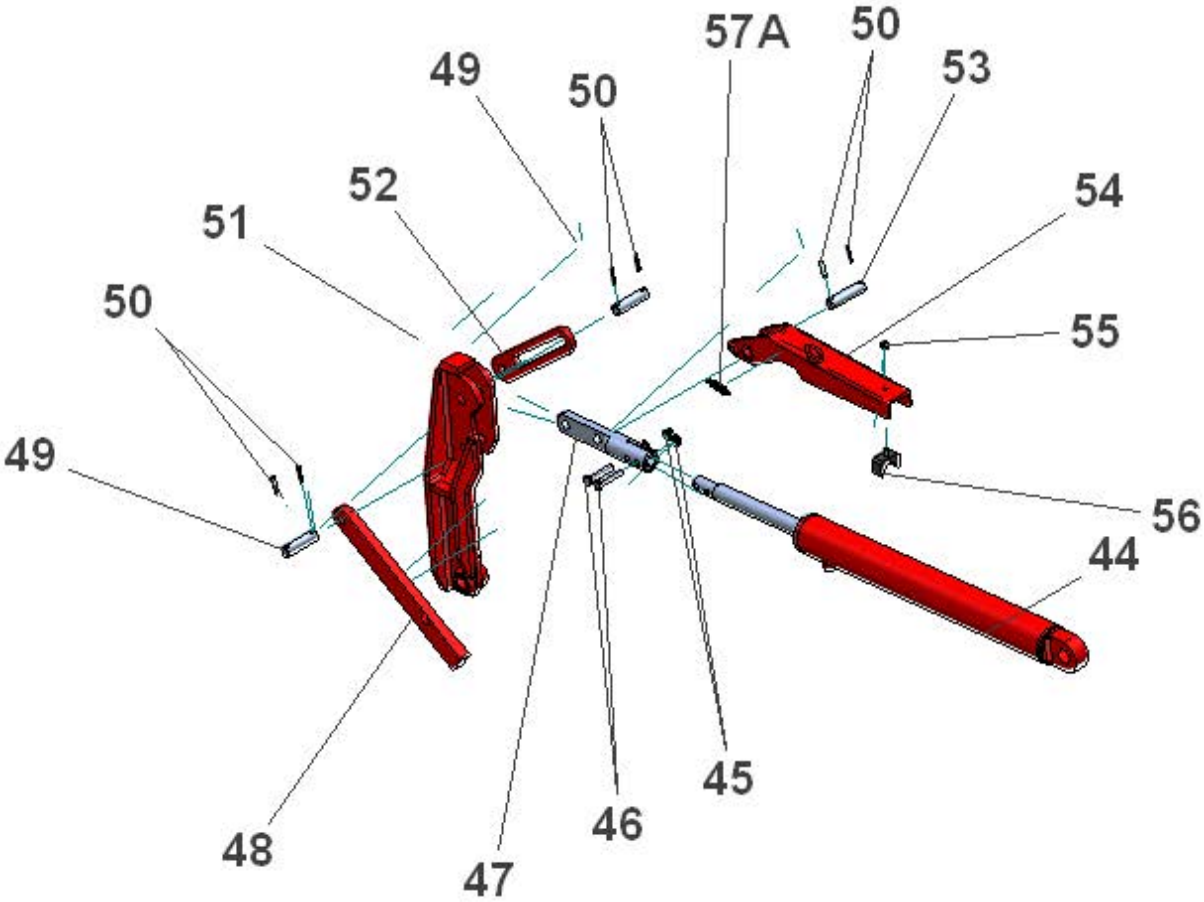

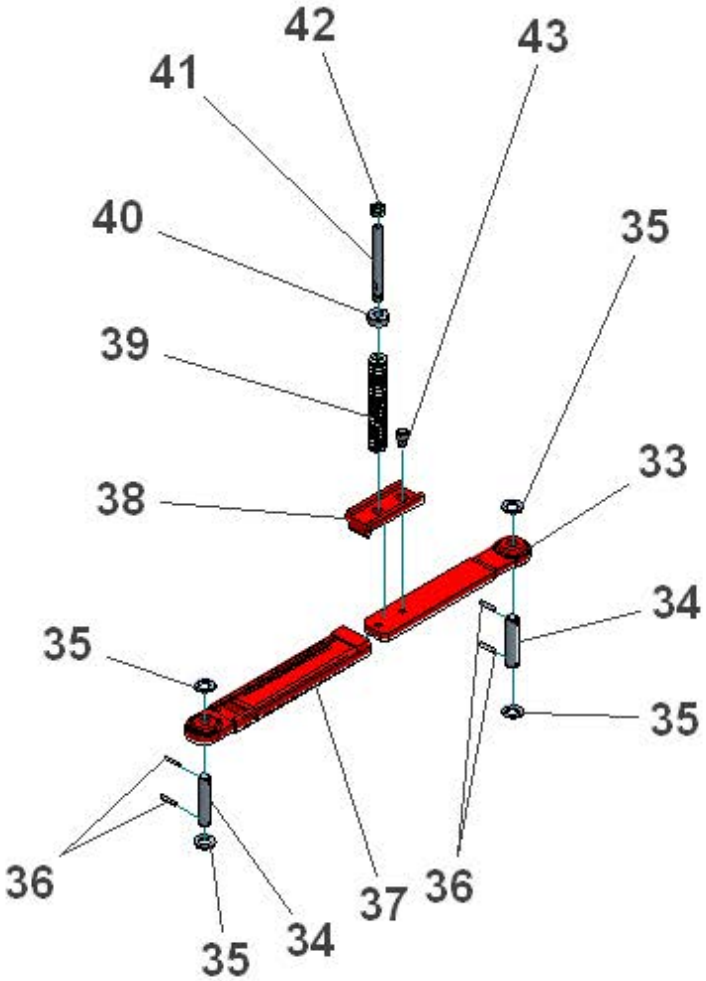

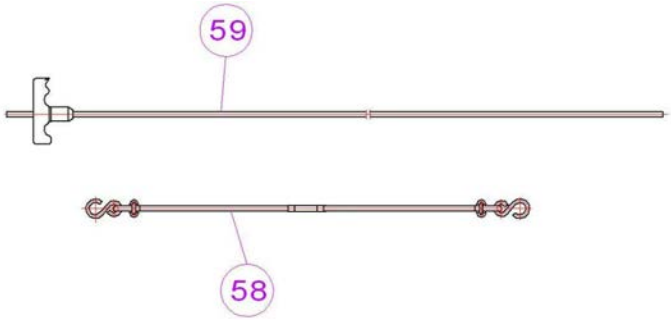

TABLE 2 COD. 19010483

Position	Code	Description	Qty.	Pos.	Code	Description	Qty
33	18031918	Tie rod	1	**47**	18031921	Rod attachment	1
34	12880953	Pin	2	**48**	18031922	Lever	1
35	3030176	Washer M22	4	**49**	12880928	Pin	2
36	3080102	Spring pin 6x36	4	**50**	3080109	Spring pin 6x32	6
37	18031919	Tie rod	1	**51**	18031923	Floating arm	1
38	18031920	Safety linkage	1	**52**	18031924	Connecting rod	1
39	11011004	Spring	40	**53**	12880930	Pin	1
40	12880893	Washer	1	**54**	18031925	Hydraulic cylinder locking	1
41	12880891	Tie rod	1	**55**	3020209	Self locking nut M8	1
42	3020204	Self locking nut M16	1	**56**	18031997	Cylinder ledge	1
43	12880892	Pin	1	**57A**	11010528	Spring	1
44	12770802	Hydraulic cylinder	1	**58**	18032419	Rope to the bar	1
45	3020201	Self locking nut M10	2	59	18032418	Rope to pull	1
46	3010304	Screw T.E. M10x55	2				

TABLE 3 COD. 19010484

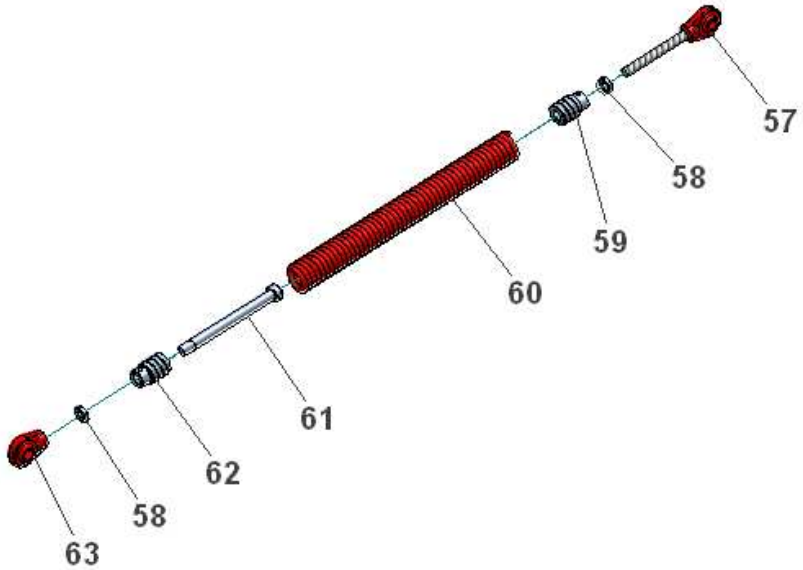

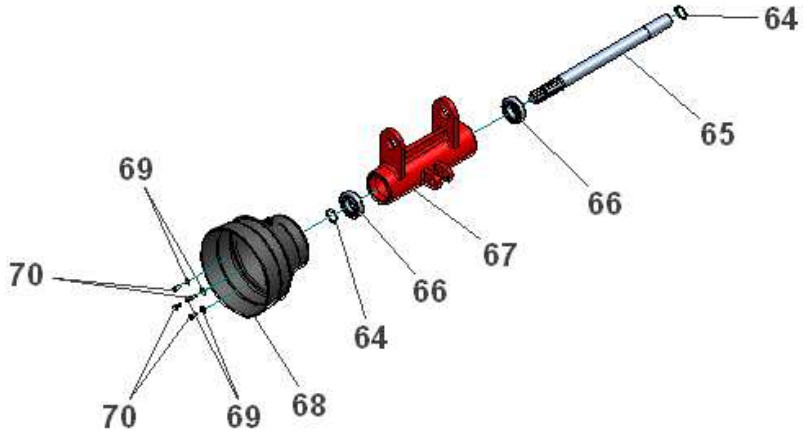

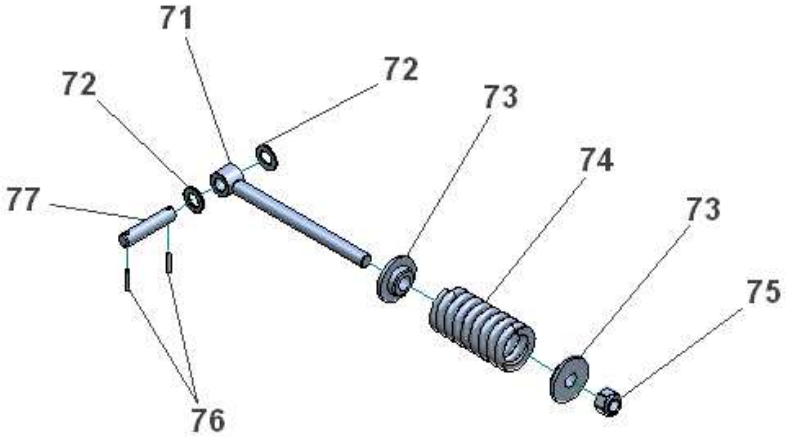

TABLE 3 COD. 19010484

Pos.	Code	Description	Qty	Pos.	Code	Description	Qty
57	18031926	Tie rod	1	**70**	3011672	Screw T.E. M6x16	4
58	3020416	Nut M27x2	2	**71**	18032406	Hinge screw M20x2,5	1
59	12880998	Bushing	1	**72**	3030168	Washer M20	2
60	11010623	Spring	1	**73**	12880985	Washer	2
61	18031927	Tie rod	1	**74**	11010624	Spring	1
62	12880904	Bushing	1	**75**	3020235	Self locking nut M20X2,5	1
63	12250019	Support	1	**76**	3080109	Split pin 6x32	2
64	3120146	Ring E35	2	**77**	12880903	Pin	1
65	18031928	Shaft	1				
66	12240145	Bearing 6207 2RSR	2				
67	18031929	Support	1				
68	9070103	Cover	1				
69	3030124	Washer M6	4				

TABLE 4 COD. 19010485

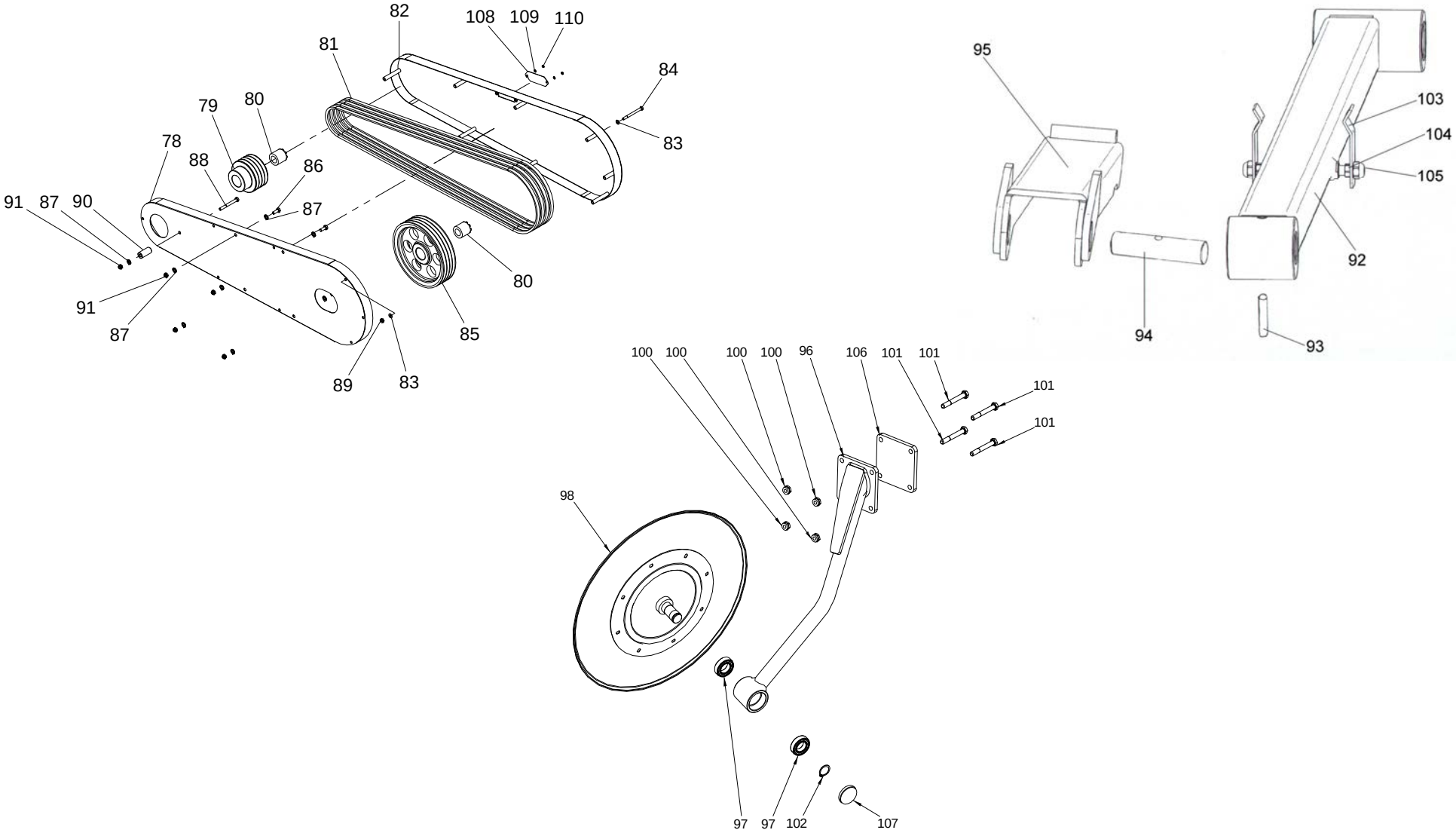

TABLE 4 COD. 19010485

Pos.	Code	Description	Qty.	Pos.	Code	Description	Qty.
78	18032408	Internal cover	1	**95**	18031934	Bar ledge	1
79	2030117	Pulley	1	**96**	18032425	Disc support	1
80	12660315	Friction locking assembly	2	**97**	12240101	bearing 6005 2RSR	2
81	8020554	Belt	4	**98**	18031936	Disc	1
82	18031932	Outer cover	1	**99**	3030162	Washer M12	4
83	3030159	Washer M10	16	**100**	3020201	Self locking nut M10	2
84	3011304	Screw T.E. M10x120	8	**101**	3011277	Screw T.E. M10x80	2
85	2030118	Pulley	1	**102**	3120110	Split ring E25	1
86	3011241	Screw T.E. M12x30	4	**103**	11010531	Spring	2
87	3030162	Washer M12	10	**104**	3020329	Nut M8 z.	2
88	3011305	Screw T.E. M12x105	1	**105**	3020209	Self locking nut M8	2
89	3020201	Self locking nut M10	8	**106**	18032426	Plate coupling	1
90	12880948	Spacer	1	**107**	10010812	Plug Ø 47	1
91	3020202	Self locking nut M12	5	**108**	1011427	Cover	1
92	18031933	Floating bar	1	**109**	3020213	Self locking nut M6	2
93	3080105	Spring pin 8x50	1	**110**	3030158	Washer M6	2
94	12880937	Guide	1				

TABLE 5 COD. 19010486

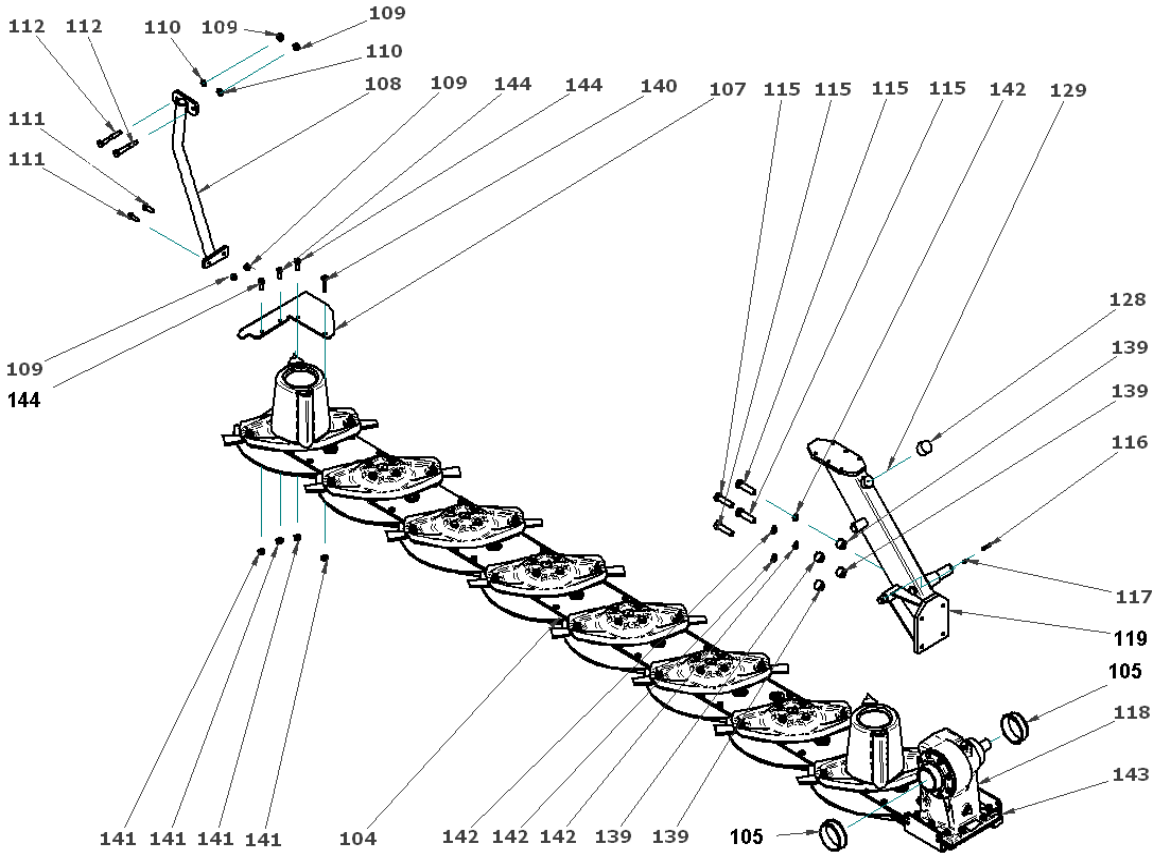

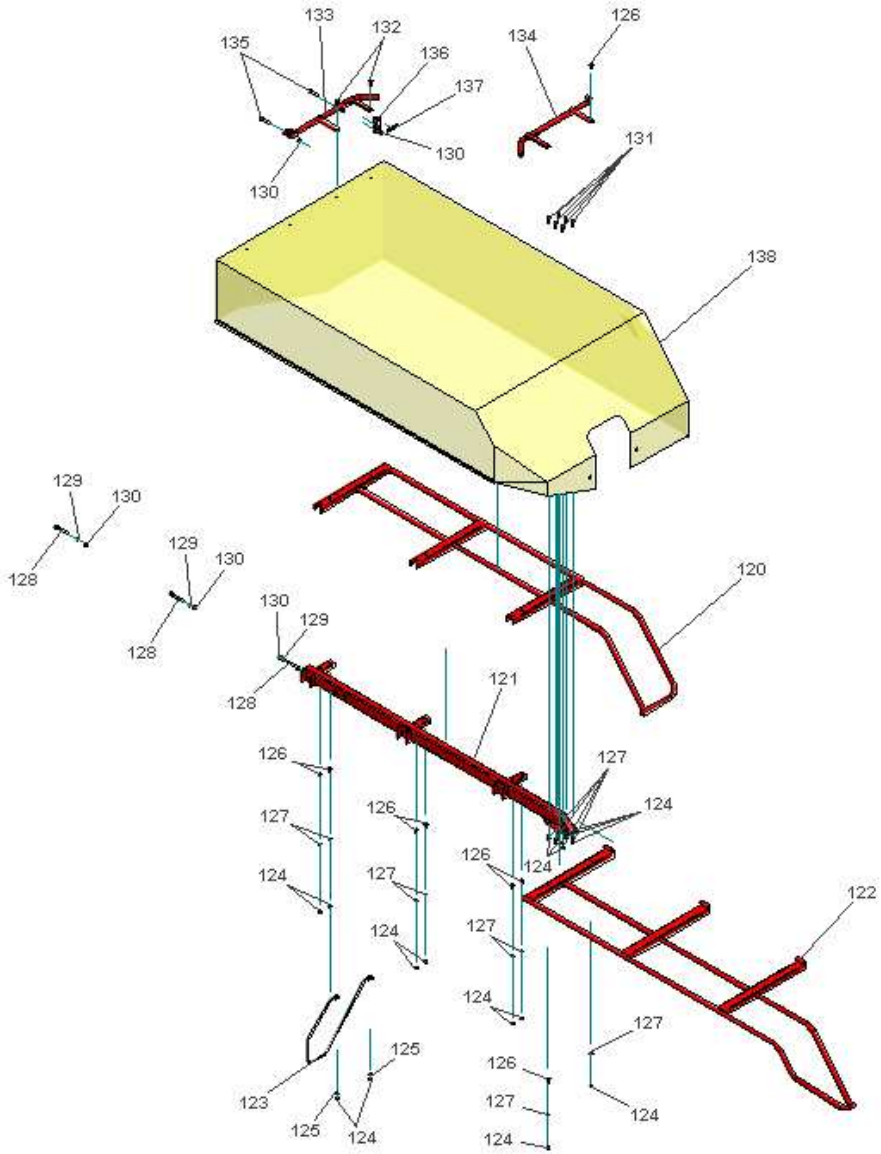

TABLE 5 COD. 19010486

Pos.	Code	Description	Qty.	Pos.	Code	Description	Qty.	Pos.	Code	Description	Qty.
103	18031937	Mobile support	1	**117**	3080109	Spring pin 6x32	1	**129**	3030162	Washer M12	3
104	12660316	Rubber knob	1	**118**	18032432	Gear box	1	**130**	3020202	Self locking nut M12	5
105	12240199	Sliding bearing	2	**119**	3011206	Screw T.E. M10x30	4	**131**	3011624	Screw T.E. M10x35	6
106	12880978	Cutter bar	1	**120**	18031940	Back protection DM 6P	1	**132**	3010128	Screw T.T.Q.S.T. M10x35	2
106/A	12881267	Cutter bar (DM 6P 3 knifes)	1	**120/A**	18031941	Back protection DM 7P	1	**133**	18031950	Back handle	1
106/B	12880981	Cutter bar (DM 7P 2 knifes)	1	**120/B**	18031942	Back protection DM 8P	1	**134**	18031951	Front handle	1
106/C	12880982	Cutter bar (DM 8P 2 knifes)	1	**121**	18031943	Protection bar DM 6P	1	**135**	3011207	Screw T.E. M12x60	2
106/D	12881268	Cutter bar DM 8P (3 knifes)	1	**121/A**	18031944	Protection bar DM 7P	1	**136**	18031952	Linkage plate	1
107	18031938	External skid	1	**121/B**	18031945	Protection bar DM 8P	1	**137**	11010515	Spring	1
108	18032427	Rod	1	**122**	18031946	Front protection DM 6P	1	**138**	9130010	Protection cover DM 6P	1
109	3020201	Self locking nut M10	4	**122/A**	18031947	Front protection DM 7P	1	**138/A**	9130012	Protection cover DM 7P	1
110	3030115	Washer M10	8	**122/B**	18031948	Front protection DM 8P	1	**138/B**	9130013	Protection cover DM 8P	1
111	3011206	Screw T.E. M10x30	2	**123**	18031949	Stem	1	**139**	18032429	Screw godronata M10x30	1
112	3011655	Screw T.E. M12x90	2	**124**	3020201	Self locking nut M10	16	**140**	18032431	Screw godronata M 10x50	1
113	3020201	Self locking nut M10	4	**125**	3030169	Washer M10	2				
114	3020238		4	**126**	3010105	Screw T.T.Q.S.T. M10x25	8				
115	3011644		4	**127**	3030159	Washer M10	14				
116	3080113	Spring pin 6x50	1	**128**	3011214	Screw T.E. M12x100	3				

TABLE 6 COD. 19010492

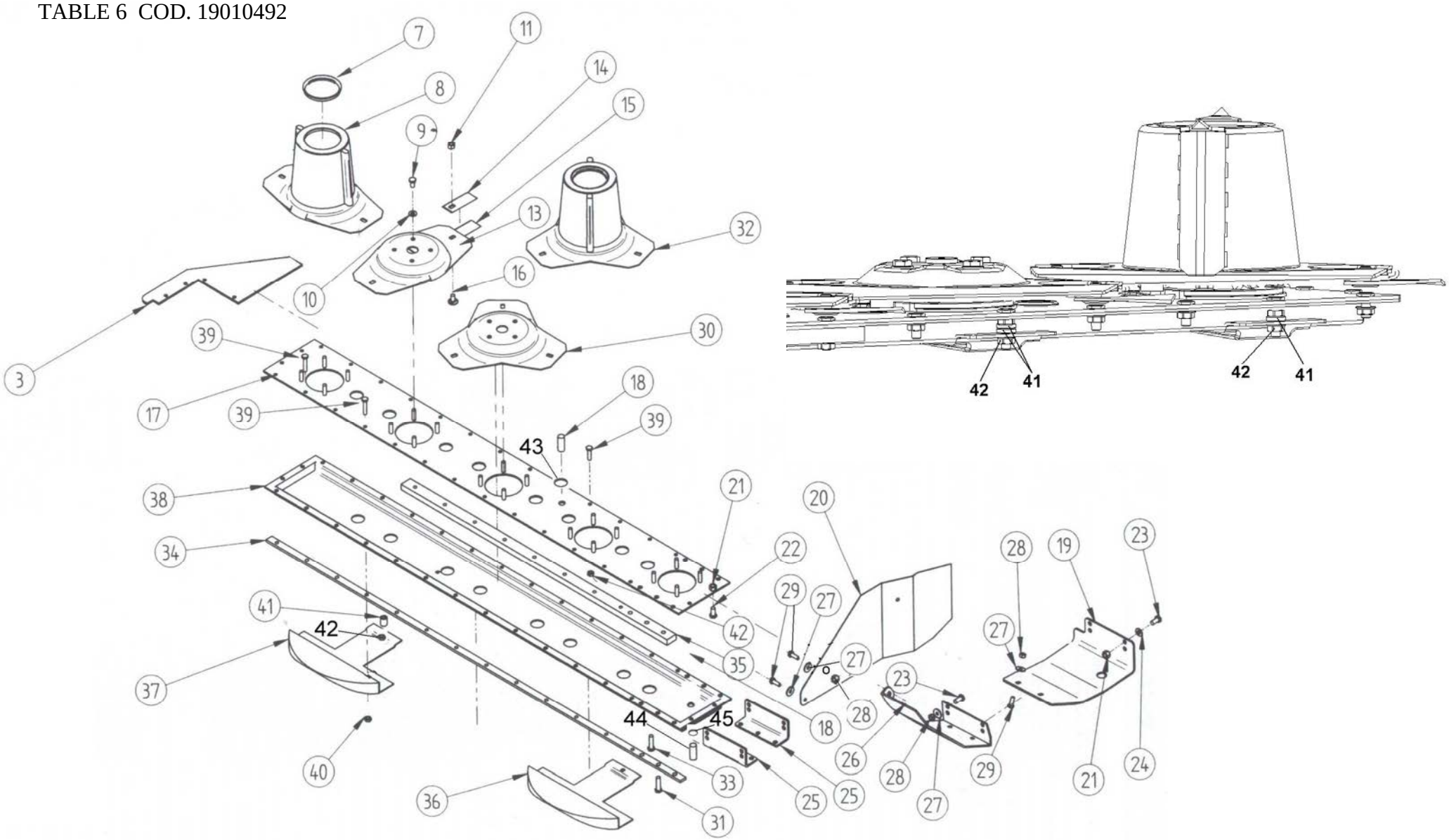

TABLE 6 COD.19010492

Pos.	Type	Code	Description	Pos.	Type	Code	Description	Pos.	Type	Code	Description
3		1012565	Deflector support	**23**	DM4-5-6	3011241	Screw T.E. M12x30	**35/C**	DM7	12580041	Reinforcement
7		12580023	Cover	**23/A**	DM6-7-8	3011216	Screw T.E. M12x35	**35/D**	DM8	12580042	Reinforcement
8		12580024	Disc convey (2 blades)	**24**		3030162	Washer M12	**36**	DM4/6/8	12580043	Skid
9		3011268	Screw M12x20	**25**		12580030	Reinforcement	**36A**	DM5/7	18032441	Skid
10		3030162	Washer M12	**26**		18031990	Box support	**37**		12580045	Skid
11		3020233	Self locking nut M12	**27**		3030159	Washer M10	**38**	DM4	12580046	Lower support
13		12881278	Disc (2 blades)	**28**		3020201	Self locking nut M10	**38/A**	DM5	12580047	Lower support
14		12881271	Right blade	**29**		3010105	Screw TTQST M10x25	**38/B**	DM6	12580048	Lower support
15		12881270	Left blade	**30**		12580032	Disc (3 blades)	**38/C**	DM7	12580049	Lower support
16		12881272	Pin knife support	**31**		3011644	Screw M12x60	**38/D**	DM8	12580050	Lower support
17	DM4	12580025	Upper support	**32**		12881273	Disc convey (3 blades)	**39**		12580051	Special screw M10x28
17/A	DM5	12580026	Upper support	**33**		3010407	Screw M12x70	**39/A**		12580052	Special screw M10x38
17/B	DM6	12580027	Upper support	**34**	DM4	12580033	Reinforcement	**39/B**		12580053	Special screw M10x50
17/C	DM7	12580028	Upper support	**34/A**	DM5	12580034	Reinforcement	**40**		3020708	Nut M10
17/D	DM8	12580029	Upper support	**34/B**	DM6	12580035	Reinforcement	**41**		12580054	Bushing
18		4010822	Plug 3/8	**34/C**	DM7	12580036	Reinforcement	**42**		3020708	Nut M10
19		18031987	Box support	**34/D**	DM8	12580037	Reinforcement	**43**		18032439	Cover support
20		18031988	Internal deflector	**35**	DM4	12580038	Reinforcement	**44**		3030403	Copper washer 3/8
21		3020202	Self locking nut M12	**35/A**	DM5	12580039	Reinforcement	**45**		4010832	Plug 3/8
22		3011213	Screw T.E. M12x45	**35/B**	DM6	12580040	Reinforcement	**46**		10010704	Oring

TAVOLA 7 COD. 19010493

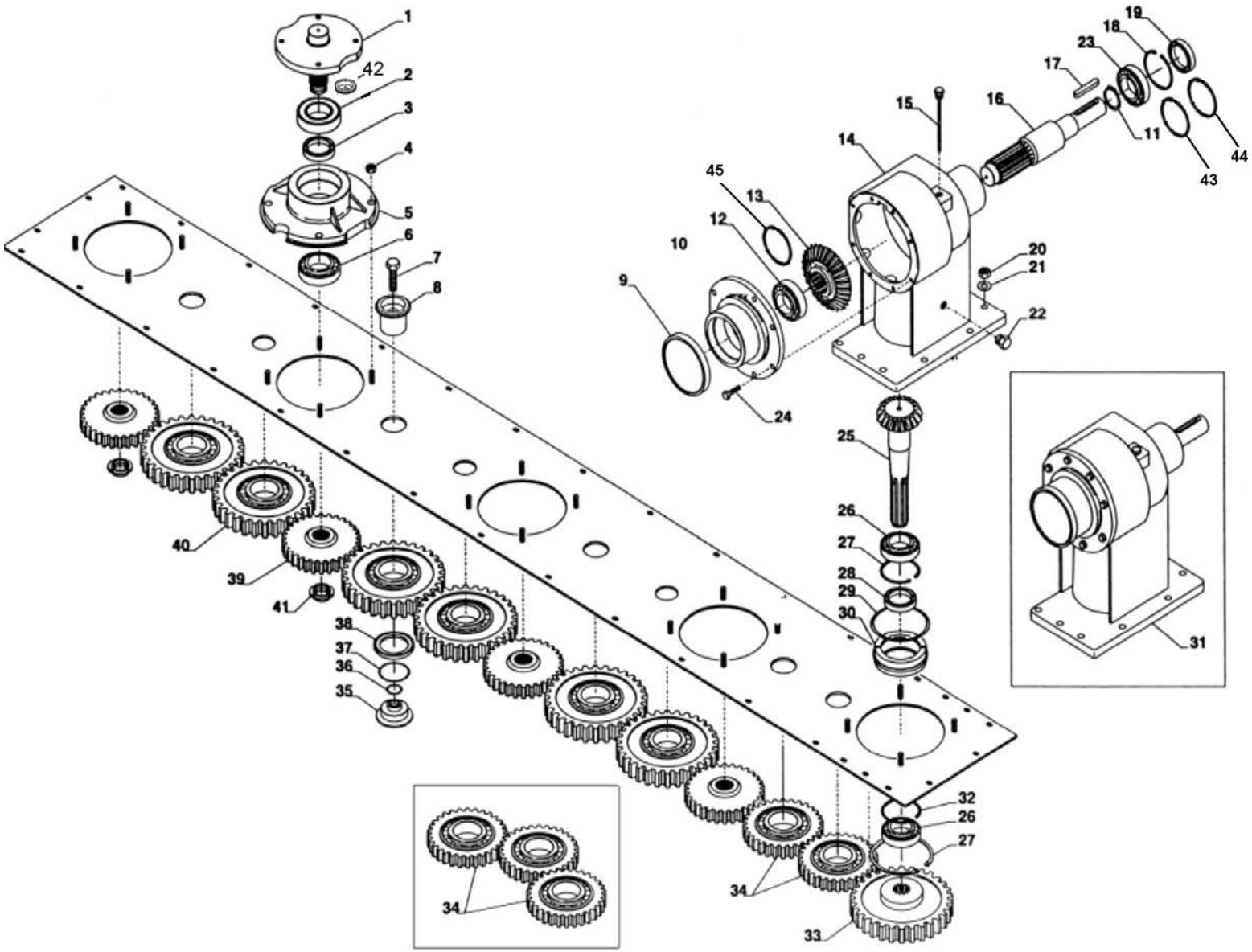

TABLE 7 COD. 19010493

Pos.	Code	Description	Pos.	Code	Description	Pos.	Code	Description
1	12580055	Upper support 6552001	**17**	3110019	Key 10x50	**33**	8010115	Gear Z 40 4152033
2	12240145	Bearing 6207 2RS	**18**	3120149	Cir clip seeger 68 I	**34**	8010116	Gear Z 31 4152034
3	12260058	Oil seal 35x62x7	**19**	12260059	Oil seal 40x68x10	**35**	12881276	Bush 1152035
4	3020708	Nut M10	**20**	3020202	Self locking nut M12	**36**	10010642	Cir clip O-R 4087
5	12580056	Disc support 6552005	**21**	3030162	Washer M12	**37**	10010696	Cir clip O-R 3156
6	12240141	Bearing 6306	**22**	4010829	Plug 6752022	**38**	12881277	Lower cir clip
7	3011650	Screw 14x35x1.5	**23**	12240217	Bearing 32008	**39**	8010117	Gear Z 30 4152039
8	12881275	Bush 1152008	**24**	3011211	Screw M10x25	**40**	8010118	Gear Z 40 4152040
9	12580057	Plug 72x9 6706171	**25**	8010223	Pinion Z 16 5052025	**41**	3180013	Castle nut 25x1.5
10	12580058	Cover 2052010	**26**	12240148	Bearing 6208 C3	**42**	10011324	NILOS
11	3120102	Cir clip seeger 35	**27**	3120147	Cir clip seeger 80 I	**43**	12280008	Fifth wheel AS 556802
12	12240143	Bearing 30207	**28**	12260060	Oil seal 40x80x10	**44**	12280009	Fifth wheel AS 556803
13	8010114	Bevel gear Z 33 2452013	**29**	10010698	Cir clip O-R 199	**45**	12880010	Fifth wheel AS 4252
14	12580059	Gearbox 6052014	**30**	12580061	Support 6552030			
15	4010828	Oil filling plug level 6752015	**31**	8010508	Complete gear box 6052031			
16	12580060	Shaft 152016	**32**	3120148	Cir clip seeger 40 E			